CLOTHES DRYER

BASIC MODEL : DV316LEW/XAA

MODEL NAME : DV337AEW DV337AGW
DV337AEG DV337AGG
DV337AEL DV337AGL
DV337AER DV337AGR
(FRONTIER2-PJT)
DV328AEW DV328AGW
DV328AER DV328AGR
(FRONTIER3-PJT)

MODEL CODE : DV337AEW/X**
DV337AGW/X**
DV328AEW/X**
DV328AEG/X**
DV328AER/X**

SERVICE Manual

PRODUCT IMAGE

THE FEATURE OF PRODUCT

1. SUPER SIZE CAPA CITY
2. ENERGY SAVING
3. TIME SAVING

Refer to the service manual in the GSPN (see the rear cover) for the more information.

CONTENTS

1. PRECAUTIONS
1-1. CAUTION FOR SAFETY DURING SERVICING 1-1
1-2. IMPORTANT SAFETY INFORMATION 1-2
1-3. PRECAUTIONS UPON INSTALLATION 1-6

2. PRODUCT SPECIFICATIONS
2-1. THE FEATURE OF PRODUCT 2-1
2-2. SPECIFICATIONS OF PRODUCT 2-2
2-3. OVERVIEW OF THE DRYER 2-3
2-4. THE COMPARATIVE SPECIFICATIONS OF PRODUCT 2-4
2-5. OPTION SPECIFICATIONS 2-5

3. OPERATING INSTRUCTIONS AND INTALLATION
3-1. OVERVIEW OF THE CONTROL PANEL 3-1
3-2. CYCLE CHART 3-3
3-3. MAIN FUNCTIONS 3-4
3-4. DESIGNATION OF MAIN COMPONENTS 3-6

4. ALIGNMENT AND ADJUSTMENTS
4-1. ERROR ITEMS AND DIAGNOSTIC CODES 4-1
4-2. TEST MODE 4-2

5. DISASSEMBLY AND REASSEMBLY
5-1. TOOLS FOR DISASSEMBLY AND REASSEMBLY 5-1
5-2. DISASSEMBLY 5-2

6. TROUBLESHOOTING
6-1. TROUBLE DIAGNOSIS 6-1
6-2. COMPONENT TESTING PROCEDURES 6-3

7. EXPLODED VIEW AND PARTS LIST
7-1. ASSY-CONTROL 7-2
7-2. ASSY-DRUM 7-6
7-3. ASSY-FRONT 7-10
7-4. ASSY-PANEL CONTROL 7-14
7-5. ASSY-MOTOR / ASSY-DUCT HEATER 7-18
7-6. PARTS LIST (SA others) 7-22
7-7. PARTS LIST (SCREW TYPE) 7-25

CONTENTS

8. BLOCK DIAGRAM 8-1

9. WIRING DIAGRAM 9-1
9-1. ELECTRIC DRYER WIRING DIAGRAM.....9-1
9-2. GAS DRYER WIRING DIAGRAM.....9-2
9-3. REFERENCE INFORMATION.....9-3

10. PCB DIAGRAM 10-1

11. SCHEMATIC DIAGRAM 11-1

12. CIRCUIT DESCRIPTIONS
12-1. OVERALL SYSTEM DIAGRAM.....12-1
12-2. POWER SUPPLY PART.....12-2
12-3. DRIVING PART.....12-3
12-4. SENSING PART 12-4
12-5. COMMUNICATION PART 12-5

13. REFERENCE INFORMATION
13-1. MODEL NAME.....13-1
13-2. TERMINOLOGY.....13-2
13-3. CHECK THESE POINTS IF YOUR DRYER.....13-3
13-4. INFORMATION CODES 13-4
13-5. FABRIC CARE CHART.....13-5

1. Precautions

1-1. Caution for safety during servicing

1. Do not allow the customer to repair the product.
   The person may be injured or the product life may be shortened..

2. Execute A/S after unplugging the power supply unit.
   Be careful of the electric shocks.

3. Do not plug several plugs in the same outlet.
   It may cause a fire due to overheat.

4. Check for damage, pressing or burning of the power plug or outlet.
   Replace it promptly if it has a problem.(It may cause the electric shocks or fire)

5. Do not clean the main body with water.
   It may cause electric shocks and fire and shorten the product life)

6. The wiring of the harness shall be free from moisture and tightened during serving.
   It shall not be deviated by certain impact.

7. Remove any dust or filth on the housing section,wiring section,connection section during servicing.
   Protect from possible cause of fire such as the tracking,shortage etc.

8. Check for any marks of moisture on the electrical parts, harness section etc.
   Replace the parts or remove the moisture..

9. Check the assembly status of the parts after servicing.
   Maintain the status before servicing..

10. Pull out the power cord by holding the plug.
    Be careful of electric shocks and when the cord is damaged.

11. Unplug the power plug from the outlet when the dryer is not used.
    Be careful of electric shocks and fire due to the strike of lightning.

12. Do not use or store sprays or flammable materials(including gasoline,alcohol etc.)
    around the dryer.
    Be careful of explosions or fire due to electric sparks.

13. Do not put bowls of water or wet laundry on the dryer.
    If water has penetrated into the dryer, this may cause electric shocks or fire.

14. Do not install the dryer where it will be exposed to bad weather.
    It may cause electric shocks and fire and shorten the product life.

15. Do not push the control buttons with an awl,pin, or sharp materials.
It may cause electric shocks and damage.

16. Check the wash machine is leveled horizontally and installed properly on the floor.
The vibration may shorten the product life..

1-2. Important Safety Information

To avoid risk of fire, electric shock, serious injury, or death when using your dryer, follow these basic precautions:

1. Read all instructions before using dryer.

2. Install dryer according to Installation Instructions. Refer to the Grounding Instructions in the Installation Instructions for proper grounding of the dryer.

3. Do not dry articles that have been cleaned in, washed in, soaked in, or spotted with gasoline, dry-cleaning solvents, or other flammable or explosive substances. Vapors could ignite or explode.

4. Do not use dryer to dry clothes which have traces of any flammable substance, such as vegetable oil, cooking oil, machine oil, flammable chemicals, thinner, etc., or anything containing wax or chemicals, such as mops and cleaning cloths. Flammable substances may cause fabric to catch fire by itself.

5. Do not store or use gasoline or other flammable vapors and liquids near this or any other appliance.

6. Do not allow children to play on or in dryer. Close supervision of children is necessary when dryer is used near children, a safety rule for all appliances.

7. Before dryer is removed from service or discarded, remove doors to drying compartment.

8. Do not reach into dryer if cylinder is revolving.

9. Do not install or store dryer where it will be exposed to water and/or weather.

10. Do not tamper with dryer controls.

11. Do not repair or replace any part of dryer or attempt any service, unless specifically recommended in user-maintenance instructions or in published user-repair instructions that you understand and have skills to carry out, if you are a consumer.

12. To reduce risk of electric shock or fire, do not use extension cords or adapters to connect dryer to electrical power source.

13. Use the dryer only for its intended purpose, drying clothes.

14. Always disconnect dryer from electrical supply before attempting any service. Disconnect power cord by grasping the plug, not the cord.

15. Do not use heat to dry articles containing foam rubber or similarly textured rubberlike materials.

16. Always clean the lint filter after every load. A layer of lint in the filter reduces drying efficiency and pro longs drying time.

17. Use only fabric softeners or products to eliminate static that are appropriate for automatic dryers.

18. Keep your dryer in good condition. Bumping or dropping dryer can damage safety features. If damage occurs, have dryer checked by qualified service technician.

19. Replace worn power cords and/or loose plugs.

20. Do not tumble fiberglass curtains and draperies unless the label says it can be done. If they are dried, wipe out the cylinder with a damp cloth to remove particles of fiberglass.

21. Always read and follow manufacturer's instructions on packages of laundry aids. Heed all warnings or precautions. To reduce risk of poisoning or chemical burns, keep products away from children at all times, preferably, in a locked cabinet.

22. Never operate dryer with guards and/or panels removed.

23. Do not operate dryer with missing or broken parts.

24. Do not bypass safety devices.

25. Keep area around the exhaust opening and adjacent surrounding areas free from accumulation of lint, dust, and dirt.

26. Interior of dryer and exhaust duct should be cleaned periodically by qualified service personnel.

27. Dryer will not operate with loading door open. DO NOT bypass door safety switch by permitting dryer to operate with door open. Dryer will stop tumbling when door is opened. Do not use dryer if it does not stop tumbling when door is opened or starts tumbling without pressing or turning the START mechanism. Remove the dryer from use and call the service person.

28. Remove laundry immediately after the dryer stops.

29. ALWAYS follow the fabric care instructions supplied by the garment manufacturer.

Electrical Service Information

Electrical Dryers
- 240 VAC, 60 Hz, 30 Amps,
  3-wire or 4-wire installations

Gas Dryers
- 120 VAC, 60 Hz, 15 Amps, 3□wire installa-tions

About Ground Wires
In the event of an electrical short circuit, a

WARNING

To reduce the risk of fire, electric shock, serious injury or death, all wiring and grounding must conform with the latest edition of the National Electric Code, or the Canadian Electrical Code, and such local regulations as might apply. It is the customer□s responsibility to have the wiring and fuses checked by a qualified electrician to make sure your home has adequate electrical power to operate the dryer.

WARNING

To avoid risk of personal injury or death due to electrical shock:
- Observe all local codes and ordinances.
- Disconnect electrical power to unit before servicing.
- Ground appliance properly.
- Check with a qualified electrician if you are not sure this appliance is properly grounded.
- DO NOT ground to gas line.
- DO NOT ground to cold water pipe if pipe is interrupted by plastic, nonmetallic gas kets, or other insulating (nonconducting) materials.
- DO NOT modify plug on power cord. If plug does not fit electrical outlet, have proper outlet installed by qualified elec trician.
- DO NOT have a fuse in the neutral or ground circuit. A fuse in the neutral or ground circuit could result in an electrical shock.
- DO NOT use an extension cord with this appliance.
- DO NOT use an adapter plug with this appliance.
- DO NOT pinch powe cord.

WARNING

To reduce the risk of fire and exposure to combustion gases, the dryer MUST be exhausted to the outdoors.
DO NOT exhaust dryer air into a window well, gas vent, chimney or enclosed, unventilated area, such as an attic, wall, ceiling, crawl space under a building or concealed space of a building.

Gas Dryer Power Supply
This equipment MUST be grounded. In the event of an electrical short circuit, grounding reduces the risk of electric shock by providing an escape wire for the electrical current. This unit is equipped with a cord having a grounding wire with a grounding plug. The plug must be plugged into an outlet that is properly installed and grounded.

Consult a qualified electrician or servicer if grounding instructions are not completely understood, or if doubt exists as to whether the equipment is properly grounded.

Do not use an extension cord. If the product power cord is too short, have a qualified electrician install a three □ slot receptacle. This unit should be plugged into a separate 60 hertz circuit with the electrical rating as shown on the serial plate.

Proper Grounding and Polarization for 120 VoltsWall Outlets
For the safety of our customers and the service technician ALL gas dryers have a three!! prong power cord and MUST be connected to a properly polarized and grounded wall outlet. This information was written for those who do not understand grounding and polarization of a wall outlet. A 120 VAC wall outlet must always be wired as shown below.

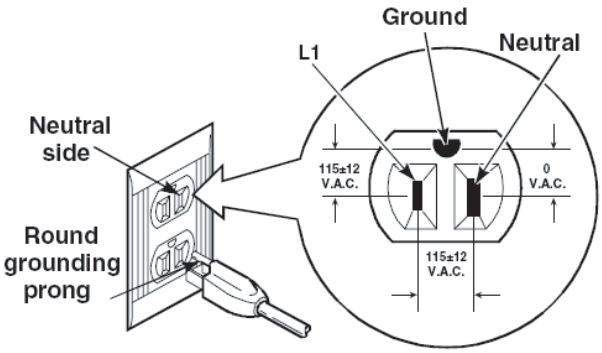

Explanation

Polarization-This means that the larger slot must be neutral and the small slot must be hot (live).
Mispolarized-The outlet is miswired so that the larger slot is hot (live) and the smaller slot is neutral.
Grounded -This means the round hole connection is connected to ground through a connection to the main power panel.
Ungrounded-The round hole connection is not connected to a ground and/or the main power panel.

Gas Connection Information

⚠ **WARNING**

To avoid death, personal injury or property damage, from fire or explosion, information in this manual must be followed exactly.
Do not store or use gasoline or other flammable vapors and liquids in the vicinity of this or any other appliance.
WHAT TO DO IF YOU SMELL GAS
- Do not try to light any appliance.
- Do not touch any electrical switch; do not use any phone in your building.
- Immediately call your gas supplier from a neighbor ’s phone. Follow the gas supplier ’s instructions.
- If you cannot reach your gas supplier, call the fire department.
  Installation and service must be performed by a qualified installer, service agency or the gas supplier.

⚠ **WARNING**

To reduce the risk of fire and exposure to combustion gases, the dryer MUST be exhausted to the outdoors.
DO NOT exhaust dryer air into a window well, gas vent, chimney or enclosed, unventilated area, such as an attic, wall, ceiling, crawl space under a building or concealed space of a building.

1-3. Precautions upon Installation

Tools needed for installation

Hire a professional to install this dryer properly. If there is a service call performed as a result of poor setup, adjustment, and connection, it is considered the responsibility of the installer. If you install the dryer you are responsible.

Make sure you have everything necessary for proper installation.

1. A GROUNDED ELECTRICAL OUTLET is required. See Electrical Requirements.
2. A POWER CORD for electric dryers (except Canada).
3. GAS LINES (if a gas dryer) must meet national and local codes.
4. EXHAUST SYSTEM – must be rigid metal or flexible stiff-walled metal exhaust ducting.

See Exhaust Requirements.

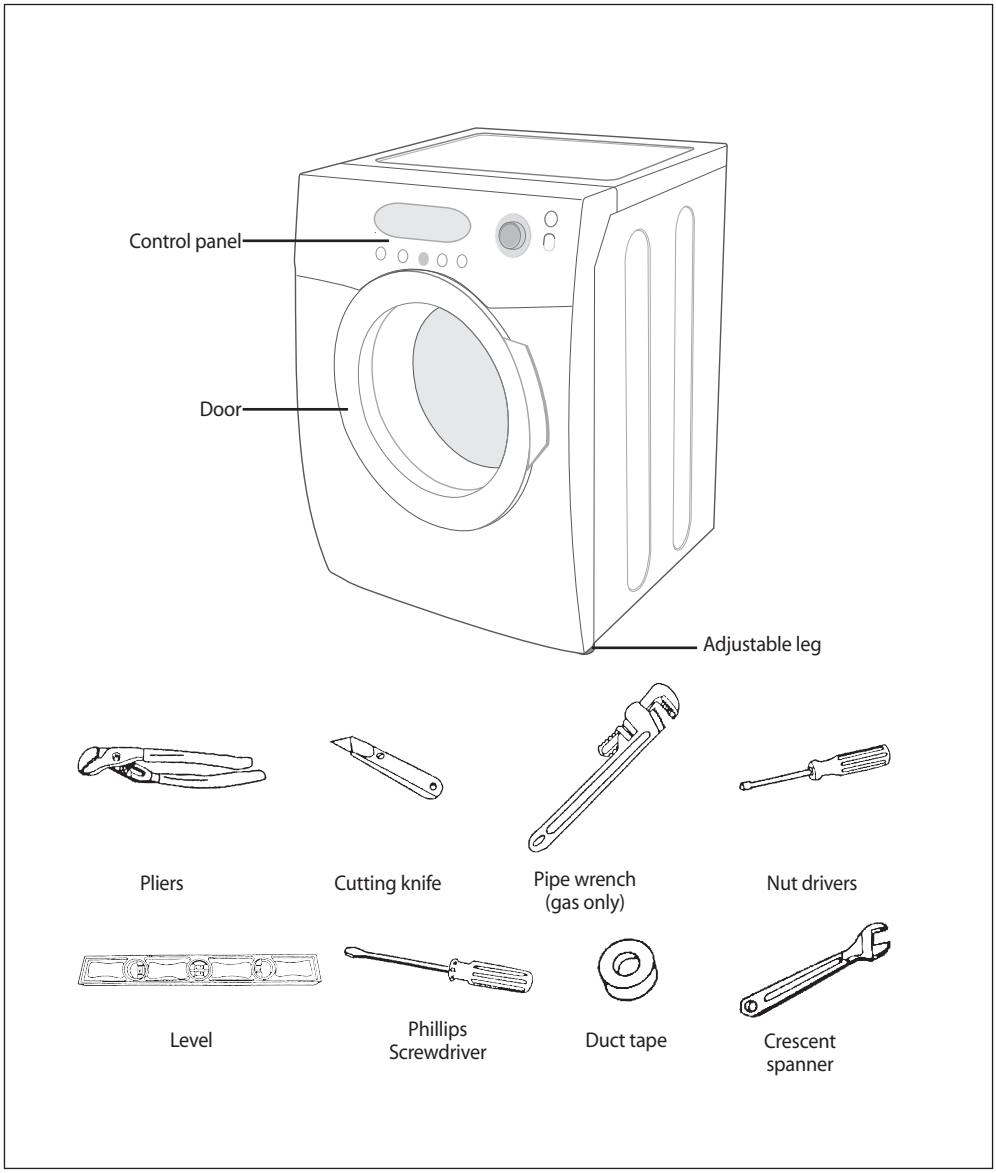

DUCTING REQUIREMENTS

- Use a 4-inch (10.2 cm) diameter rigid aluminum or rigid galvanized steel duct.
- Do not use a smaller duct.
- Ducts larger than 4 inches (10.2 cm) in diameter can result in increased lint accumulation. Lint accumulation should be cleaned regularly.
- If a flexible metal duct must be used, use the type with a stiff sheet metal wall. Do not use a flexible duct with a thin foil wall. Serious blockage can result if the flexible metal duct is bent too sharply.
- Never install any type of flexible duct in walls, ceilings, or other concealed spaces.
- Keep exhaust duct as straight and short as possible.
- Secure joints with duct tape. Do not use screws.
- DO NOT EXHAUST DRYER INTO ANY WALL, CEILING, CRAWL SPACE, OR CONCEALED SPACE OF A BUILDING, GAS VENT, OR ANY OTHER COMMON DUCT OR CHIMNEY.
  THIS COULD CREATE A FIRE HAZARD FROM LINT EXPELLED BY THE DRYER.
- Plastic flexible duct can kink, sag, be punctured, reduce airflow, extend drying times, and affect dryer operation.
- Exhaust systems longer than recommended can extend drying times, affect machine operation, and may collect lint.
- The exhaust duct should end with an exhaust hood with a swing-out damper to prevent back drafts and entry of wildlife. Never use an exhaust hood with a magnetic damper.
- The hood should have at least 12 inches (30.5 cm) of clearance between the bottom of the hood and the ground or other obstruction. The hood opening should point down.
- Never install a screen over the exhaust outlet.
- To avoid lint buildup, do not exhaust the dryer directly into a window well. Do not exhaust under a house or porch.
- If exhaust ductwork must run through an unheated area, the duct should be insulated and slope slightly down towards the exhaust hood to reduce condensation and lint buildup.
- Inspect and clean the interior of the exhaust system at least once a year. Unplug the power cord before cleaning.
- Check frequently to be sure the exhaust hood damper opens and closes freely.

	ELECTRIC AND GAS DRYER			
	Weather Hood Type			
	Recommended		Use only for short-run installation	
	4” (10 .16 cm)		2.5” (6.35 cm) 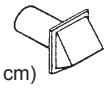	
No. of 90° elbows	Rigid	Metallic Flexible*	Rigid	Metallic Flexible*
0	24.4 m (80 ft.)	12.4 m (41 ft.)	22.6 m (74 ft.)	10.1 m (33 ft.)
1	20.7 m (68 ft.)	11.2 m (37 ft.)	18.9 m(62 ft.)	8.8 m (29 ft.)
2	17.4 m (57 ft.)	10.1 m (33 ft.)	15.5 m(51 ft.)	7.6 m (25 ft.)
3	14.3m (47 ft.)	9.0 m (29 ft.)	12.5 m(41 ft.)	6.5 m (21 ft.)

* Do not use non-metallic flexible duct.

If new dryer is installed into an existing exhaust system you must make sure:

- The exhaust system meets all local, state, and national codes.
- That flexible plastic duct is not used.
- Inspect and clean all lint buildup from inside the existing duct.
- The duct is not kinked or crushed.
- The exhaust hood damper opens and closes freely.

The static pressure in any exhaust system must not exceed 0.83 inches of water column, or be less than 0. This can be measured with the dryer running with a manometer at the point where the exhaust duct connects to the dryer. A no-heat setting should be used. The dryer tumbler shoul

REMOVE THE DOOR FROM ALL DISCARDED APPLIANCES TO AVOID THE DANGER OF A CHILD SUFFOCATING.

LOCATION CONSIDERATIONS

The dryer should be located where there is enough space in front for loading the dryer, and enough space behind for the exhaust system. This dryer is factory-ready for rear exhaust. To exhaust out the bottom or the left, use the accessory exhaust kit. Instructions are included with the kit. It's important to make sure the room has enough fresh air. The dryer must be located where there is no air-flow obstruction.
On gas dryers, adequate clearance as noted on the data plate must be maintained to ensure adequate air for combustion and proper dryer operation.

THE DRYER MUST NOT BE INSTALLED OR STORED IN AN AREA WHERE IT WILL BE EXPOSED TO WATER AND/OR WEATHER. THE DRYER AREA IS TO BE KEPT CLEAR OF COMBUSTIBLE MATERIALS, GASOLINE, AND OTHER FLAMMABLE VAPORS AND LIQUIDS. A DRYER PRODUCES COMBUSTIBLE LINT. THE AREA AROUND THE DRYER SHOULD BE KEPT LINT-FREE.

ALCOVE OR CLOSET INSTALLATION

WARNING – The dryer must be exhausted to the outside to reduce the risk of fire when installed in an alcove or closet.

- No other fuel-burning appliance should be installed in the same closet as the dryer.
- WARNING: To reduce the risk of fire, this dryer MUST BE EXHAUSTED TO THE OUTDOORS. See EXHAUST INFORMATION section.
- Minimum clearances between the dryer and adjacent walls or other surfaces are: 2" in front, 17" on top, 1" on either side, and 2.375" in the back.
- Closet front must have two unobstructed air openings for a combined minimum total area of 72 in² with 3" minimum clearance on the top and bottom. A louvered door with equivalent space clearance is acceptable.

MOBILE HOME INSTALLATION

The installation of the dryer in mobile homes must conform to the Manufactured Home Construction and Safety Standard Title 24 CFR, Part 32-80 {formerly the Federal Standard for Mobile Home Construction and Safety, Title 24, HUD (Part 280), 1975} for the United States) or CSA Standards Z240 (for Canada).
When installing a dryer in a mobile home, provisions for anchoring the dryer to the floor must be made.
Locate in an area that has adequate fresh air.
A minimum of 72 in² (183 cm²) of unobstructed space is required.
All mobile home installations must be exhausted to the outside with the exhaust duct termination securely fastened to the mobile home structure, using materials that will not support combustion.
The exhaust duct may not terminate underneath the mobile home.
See Exhausting section for more information.

EXHAUSTING

Exhausting the dryer to the outside will prevent large amounts of lint and moisture from being blown into the room.

In the United States:

- All dryers must be exhausted to the outside.
- Only rigid or flexible metal duct should be used for exhausting.

In Canada:

- All dryers must be exhausted to the outside.

Outside the U.S. and Canada:

- Refer to local codes.

⚠ **WARNING** –The dryer must be exhausted to the outside to reduce the risk of fire when installed n an alcove or closet.
NEVER USE PLASTIC OR NON-METAL FLEXIBLE DUCT.
If your existing ductwork is plastic, non-metal, or combustible, replace it with metal.
Use only metal exhaust duct that is non-flammable to ensure containment of exhaust air, heat, and lint.

GAS REQUIREMENTS

Use only natural or LP (liquid propane) gases.

THE INSTALLATION MUST CONFORM WITH LOCAL CODES, OR IN THE ABSENCE OF LOCAL CODES, WITH THE NATIONAL FUEL GAS CODE ANSI/Z223.1, LATEST REVISION (FOR THE UNITED STATES), OR WITH THE CAN/CGA-B149 INSTALLATION CODES (FOR CANADA).

Gas dryers are equipped with a burner vent for use with natural gas. If you plan to use your dryer with LP (liquid propane) gas, it must be converted for safe and proper performance by a qualified service technician. A 1/2" (1.27 cm) gas supply line is recommended and must be reduced to connect to the 3/8" (1 cm) gas line on your dryer. The National Fuel Gas Code requires that an accessible, approved manual gas shut-off valve be installed within 6' of your dryer.

Gas dryers installed in residential garages must be raised 18 inches (46 cm) above the floor.

Additionally, a 1/8" (0.3 cm) N.P.T. (National Pipe Thread) plugged tapping, accessible for test gauge connection, must be installed immediately upstream of your dryer's gas supply connection.

Your dryer must be disconnected from the gas supply pipe system during any pressure testing of the system.

DO NOT reuse old flexible metal gas lines. Flexible gas lines must be design certified by the American Gas Association (CGA in Canada).

NOTE:
- Any pipe joint compound used must be resistant to the action of any liquefied petroleum gas.
- As a courtesy, most local gas utilities will inspect a gas appliance installation.

GAS IGNITION – Your dryer uses an automatic ignition system to ignite the burner.
There is no constant burning pilot.

COMMONWEALTH OF MASSACHUSETTS INSTALLATION INSTRUCTIONS

Your dryer must be installed by a licensed plumber or gas fitter. A "T" handle manual gas valve must be installed in the gas supply line to your dryer. If a flexible gas connector is used to install your dryer, the connector must have a maximum length of 3' (36").

WARNING – Gas leaks may occur in your system, creating a dangerous situation.
Gas leaks may not be detected by smell alone.
Gas suppliers recommend you purchase and install a UL-approved gas detector.
Install and use in accordance with manufacturer's instructions.

ELECTRICAL REQUIREMENTS

NOTE: Wiring diagram is located on plate below the control panel.

WARNING

- Improper connection of the equipment grounding conductor can result in a risk of electric shock. Check with a qualified electrician or serviceman if you are in doubt as to whether your dryer is properly grounded. Do not modify the plug provided with your dryer – if it doesn't fit the outlet, have a proper outlet installed by a qualified electrician.
- To prevent unnecessary risk of fire, electrical shock, or personal injury, all wiring and grounding must be done in accordance with local codes, or in the absence of local codes, with the National Electrical Code, ANSI/NFPA No. 70-Latest Revision (for the U.S.) or the Canadian Electrical Code CSA C22.1 – Latest Revisions and local codes and ordinances. It is your responsibility to provide adequate electrical services for your dryer.
- All gas installations must be done in accordance with the national Fuel Code ANSI/Z2231 – Lastest Revision (for the U.S.) or CAN/CGA – B149 Installation Codes – Latest Revision (for Canada) and local codes and ordinances.

GROUNDING

This dryer must be grounded. In the event of malfunction or breakdown, the ground will reduce the risk of electrical shock by providing a path of least resistance for electrical current.

GAS MODELS

Your dryer has a cord with an equipment-grounding conductor and a grounding plug.
The plug must be plugged into an appropriate outlet that is properly installed and grounded in accordance with all local codes and ordinances.
Do not modify the plug provided with your dryer – if it doesn't fit the outlet, have a proper outlet installed by a qualified electrician.
NEVER CONNECT GROUND WIRE TO PLASTIC PLUMBING LINES, GAS LINES, OR HOT WATER PIPES.

ELECTRIC MODELS

Your dryer has a cord with an equipment-grounding conductor and a grounding plug.
The plug must be plugged into an appropriate outlet that is properly installed and grounded in accordance with all local codes and ordinances.
If a power cord is not used and the electric dryer is to be permanently wired, the dryer must be connected to a permanent grounded metal wiring system, or an equipment grounding conductor must be run with the circuit conductors and connected to the equipment grounding terminal.

ELECTRICAL CONNE CTIONS

Before operating or testing, follow all grounding instructions in the Grounding section.
An individual branch (or separate) circuit serving only your dryer is recommended. DO NOT USE AN EXTENSION CORD.

GAS MODELS – U.S. and Canada

A 120 volt, 60 Hz AC approved electrical service, with a 15-ampere fuse or circuit breaker is required.

ELECTRIC MODELS – U.S. Only

Most U.S. dryers require a 120/240 volt, 60 Hz AC approved electrical service. Some require 120/208 volt, 60 Hz approved electrical service. The electric service requirements can be found on the data label located behind the door. A 30-ampere fuse or circuit breaker on both sides of the line is required.

- If a power cord is used, the cord should be plugged into a 30-ampere receptacle.
- The power cord is NOT provided with U.S. electric model dryers.

IMPORTANT:

When local codes allow, the dryer electrical supply may be connected by means of a new power supply cord kit, marked for use with a dryer, that is U.L. listed and rated at a minimum of120/240 volts, 30-ampere with three No. 10 copper wire conductors terminated with closed loop terminals, open-end spade lugs with turned up ends, or with tinned leads.

1. size of the conductors and the type of cord.
2. 3/4” (1.9 cm) UL-listed strain relief

- Do not reuse a power supply cord from an old dryer. The power cord electric supply wiring must be retained at the dryer cabinet with a suitable UL-listed strain relief.
- Grounding through the neutral conductor is prohibited for (1) new branch-circuit installations, (2) mobile homes, (3) recreational vehicles, and (4) areas where local codes prohibit grounding through the neutral conductor. (Use 4-prong plug for 4 wire receptacle, NEMA type 14-30R.)

ELECTRIC MODELS – Canada Only

- A 120/240 volt, 60 Hz AC approved electrical service fused through a 30-ampere fuse or circuit breaker on both sides of the line is required.
- All Canadian models are shipped with the power cord attached. The power cord should be plugged into a 30-ampere receptacle.

NOTE: It is not permissible to convert a dryer in Canada to 208 volts.

REPLACEMENT PARTS AND ACCESSORIES

If your dryer requires replacement parts or accessories, contact the dealer from whom you purchased your dryer or a SAMSUNG customer care center at 1-800-SAMSUNG (726-7864).

INSTALLATION

Parts and literature are packaged inside your dryer drum. To install:

1. Move your dryer to an appropriate location for installation. Consider installing the dryer and washer side-by-side, to allow access to gas, electrical, and exhaust connections.
   Lay two of the carton cushion-tops on the floor. Tip your dryer on its side so it will lay across both cushion-tops.

2. Set your dryer back in an upright position.

3. Review the Exhausting section before installing the exhaust system. Install the ductwork from your dryer to the exhaust hood. The crimped end of the duct sections must point away from your dryer.
   DO NOT use sheet metal screws when assembling ducting. These joints should be taped.
   Never use plastic flexible exhaust material.

Tip for tight installations: install a section of exhaust system to your dryer before putting it in place.
Use duct tape to secure this section to your dryer, but do not cover louvers in dryer cabinet.

4. Review Electrical Requirements section.

BEFORE OPERATING OR TESTING, follow the grounding instructions in the Grounding section.

U.S. MODELS:

IMPORTANT – All U.S. models are produced for a **3-WIRE SYSTEM CONNECTION**.
The dryer frame is grounded to the neutral conductor at the terminal block.

A **4-WIRE SYSTEM CONNECTION** is required for new or remodeled construction, mobile homes, or if local codes do not permit grounding through neutral. If the 4-wire system is used, the dryer frame cannot be grounded to the neutral conductor at the terminal block. Refer to the following instructions for 3- and 4-WIRE SYSTEM CONNECTIONS.

Remove the terminal block cover plate.

Insert the power cord with a UL-listed strain relief through the hole provided in the cabinet near the terminal block.
NOTE: A strain relief must be used.

Do not loosen the nuts already installed on the terminal block. Be sure they are tight.
Use a 3/8” (1cm) deep well socket.

5. Review Gas Requirements section.

Remove the pipe thread protective cap.

Apply pipe joint compound or about 1 1/2 wraps of Teflon tape over all threaded connections.
NOTE: Pipe joint compound must be resistant to the action of any liquefied petroleum gas.

Connect the gas supply to your dryer.
An additional fitting is required to connect the 3/4” (1.9 cm) female thread end of a flexible connector to the 3/8” (1 cm) male threaded end on the dryer.
Securely tighten the gas line fitting over threads.

Turn on the gas supply. Check all gas connections for leaks using a soap solution.
If bubbles appear, tighten the connections and recheck.

DO NOT use an open flame to check for gas leaks.

3-WIRE SYSTEM CONNECTIONS

1. Loosen or remove center terminal block screw.
2. Connect neutral wire (white or center wire) of the power cord to the center, silver-colored terminal screw of the terminal block. Tighten screw.
3. Connect the other wires to outer terminal block screws. Tighten screws.
4. Tighten strain relief screws.
5. Insert tab of terminal block cover into your dryer's rear panel slot. Secure cover with hold-down screw.

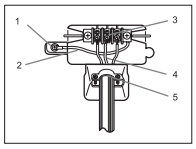

- External ground connector
- Neutral grounding wire (green/yellow)
- Center silver-colored terminal block screw
- Neutral wire (white or center wire)
- 3/4" (1.9 cm) UL-listed strain relief

WARNING: If converting from a 4-wire electrical system to a 3-wire, the ground strap must be reconnected to the terminal block support to ground the dryer frame to the neutral conductor.

4-WIRE SYSTEM CONNECTIONS

1. Remove center terminal block screw.
2. Connect ground wire (green or unwrapped) of power cord to external ground conductor screw.
3. Connect neutral wire (white or center wire) of power cord and appliance ground wire (green with yellow stripes) under central screw of the terminal block.
4. Connect the other wires to outer terminal block screws. Tighten screws.
5. Tighten strain relief screws.
6. Insert tab of terminal block cover into your dryer's rear panel slot. Secure cover with hold-down screw.

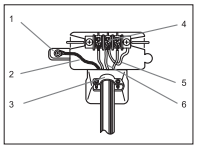

- External ground connector
- Green or bare copper wire of power cord
- 3/4 in. (1.9 cm) UL-listed strain relief
- Center silver-colored terminal block screw
- Grounding wire (green/yellow)
- Neutral wire (white or center wire)

6. With a level, check your dryer and make necessary adjustments to the leveling legs.

7. At this time, make sure all gas connections (on gas models), exhaust and electrical connections are complete. Plug in your dryer, and check operation by using the checklist below.

8. (GAS MODELS ONLY)
The burner may not ignite initially due to air in the gas line. Allowing your dryer to operate on a heat setting will purge the line. If the gas does not ignite within 5 minutes, turn your dryer off and wait 5 minutes. Be sure the gas supply to your dryer has been turned on. In order to confirm gas ignition, check the exhaust for heat.

FINAL INSTALLATION CHECKLIST

- □ Dryer is plugged into electrical outlet and properly grounded.
- □ Exhaust ductwork is hooked up and joints taped.
- □ Plastic flexible duct is NOT used.
- □ Use rigid or stiff-walled flexible metal vent material.
- □ Dryer is level with all legs firmly on the floor.
- □ Gas models – gas is turned on with no gas leaks.
- □ Start your dryer to confirm that it runs, heats, and shuts off.

Dryer Exhaust Tips

WARNING: Plastic or non-metal flexible duct presents a potential fire hazard.

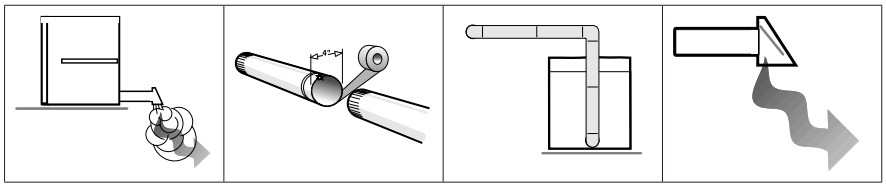

1. Let your dryer exhaust the air easily.

2. Use 4” diameter rigid metal duct.Tape all joints, including at the dryer.
   Never use lint-trapping screws.

3. Keep ducts as straight as possible.

4. Clean all old ducts before installing your new dryer.
   Be sure vent flap opens and closes freely.
   Inspect and clean the exhaust system annually.

Don’t let a poor exhaust system slow drying by:

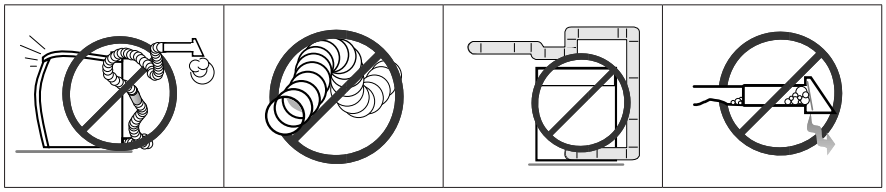

1. Restricting your dryer with a poor exhaust system.

2. Using a plastic, thin foil, or non-metal flexible duct.

3. Using unnecessarily long duct runs with many elbows.

4. Allowing crushed or clogged ducts and vent.

Door Reversal

1. Unplug power cord. 2. Remove two door hinge screws. 3. Lift the door and remove from dryer.	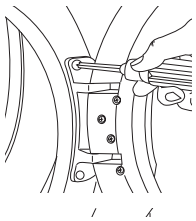	7. Reassemble the black screw in the other hole.	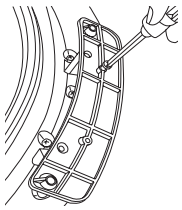
4. Remove two screws on the opposite side of door hinge.	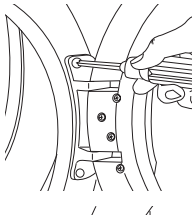	8. Place the door on the other side and reattach it to the dryer.	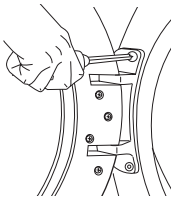
5. Remove two screws on holder lever.	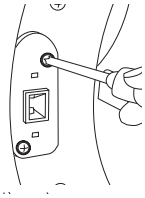	9. Reassemble the holder lever.	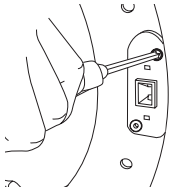
6. Remove one black screw from the door hinge.	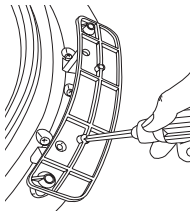	10.Reassemble the screws in the remaing holes.	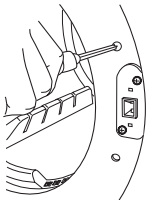

2. PRODUCT SPECIFICATIONS

2-1. THE FEATURE OF PRODUCT

- Extra-Large Capacity
- Energy Saving
- Time Saving

Main Feature	- Capacity 7.3 cu.ft. - Energy Saving [3.01 KWh/Cycle] - Time Saving [Normal Course:44min]
Sub Feature	- Fuzzy Algorithm - Easy Reversible Door - Ergonomic Design [Slanted Control Panel]

1. Extra Large Capacity

Ultra washing and drying are at your Fingertips! Now you can do extra-large loads in both the washer and dryer. Plus our ultra-large 7.3 cu.ft. capacity dryer circulates more air through your clothes getting them dry faster, for a wrinkle-free result.

2. Energy Saving

Samsung dryers are super energy efficient, using only 3.01 kWh per pound of laundry.
And both the large capacity and Fuzzy Logic Control save energy by automatically drying your clothes the most efficient way.

3. Time Saving

Our cycles are designed with you in mind. All our dryers are designed to dry your clothes in less time... just 44 minutes! Giving you time for more important things in life.

4. Various Drying Cycles & Fuzzy Logic Algorithm

Simply turn the Jog Dial to select one of the 11 automatic drying cycles, including normal, heavy duty and towels. Or let Fuzzy Logic Control measure the degree of dampness and automatically set the drying time. Precision drying never got easier than with Samsung.

5. Easy Reversible Door

Our dryers will Fit just about anywhere and without a door conflict. The direction of our easy reversible door can be changed with just four screws.

6. Slanted Control Panel

You can see what your laundry is doing from any direction you'd like with our easy-to-read slanted control panel.

7. Stacking

Washer and Dryer can be stacked to maximize usable space.

8. Freshen Up Cycle

Want to freshen up a garment that doesn’t need washing, but could deserve a little help after last night’s party. Our Freshen Up Cycle removes odors, adding that extra freshness to give more mileage to your clothes.

2-2. SPECIFICATIONS OF PRODUCT

WASH TYPE	FRONT LOADING TYPE			
DIMENSION	Div	Inches (cm)	Div	Inches (cm)
	A. Height	38” (96.5)	C. Depth with door open 90°	49” (124.5)
	B. Width	27” (68.6)	D. Depth	30.25” (77.0)
WEIGHT	56.8kg			
HEATER RATING	5300W			
POWER CONSUMPTION	NO HEAT		268W	
	HEATING		5445W	

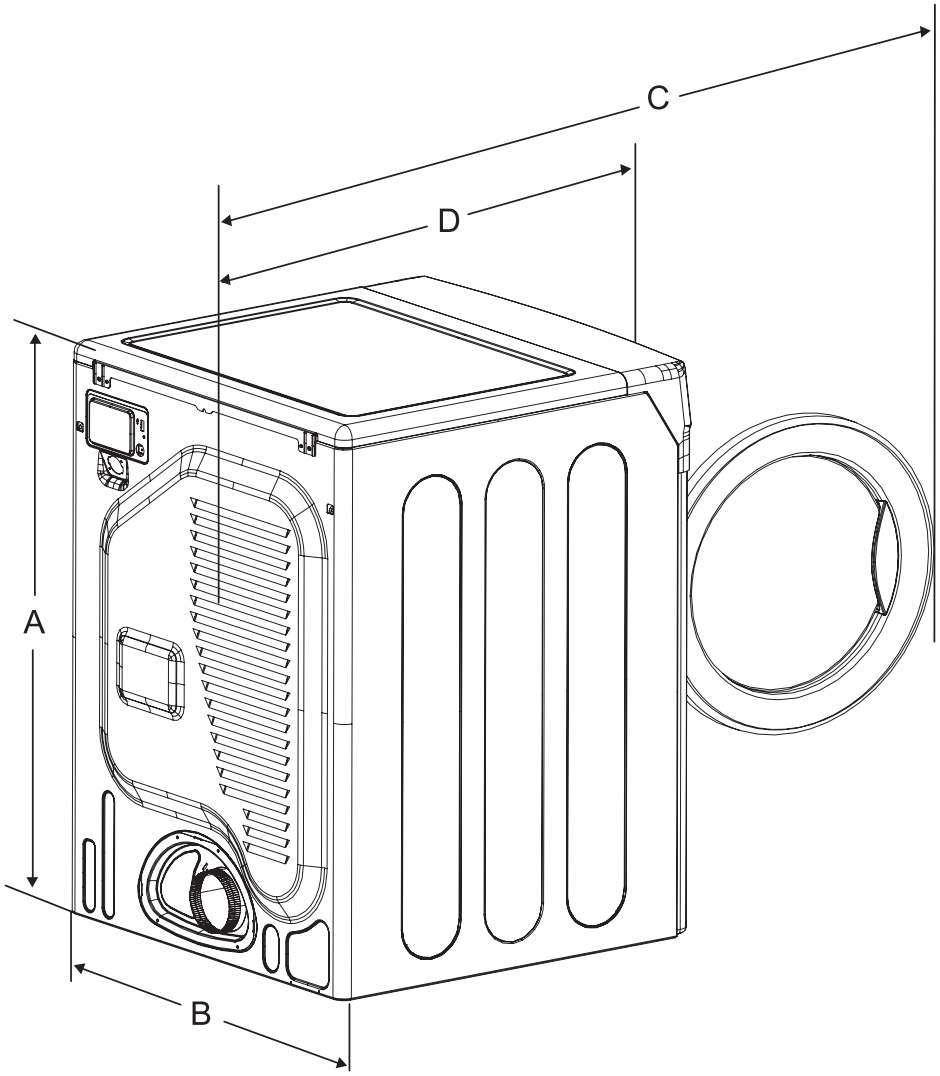

2-3. OVERVIEW OF THE DRYER

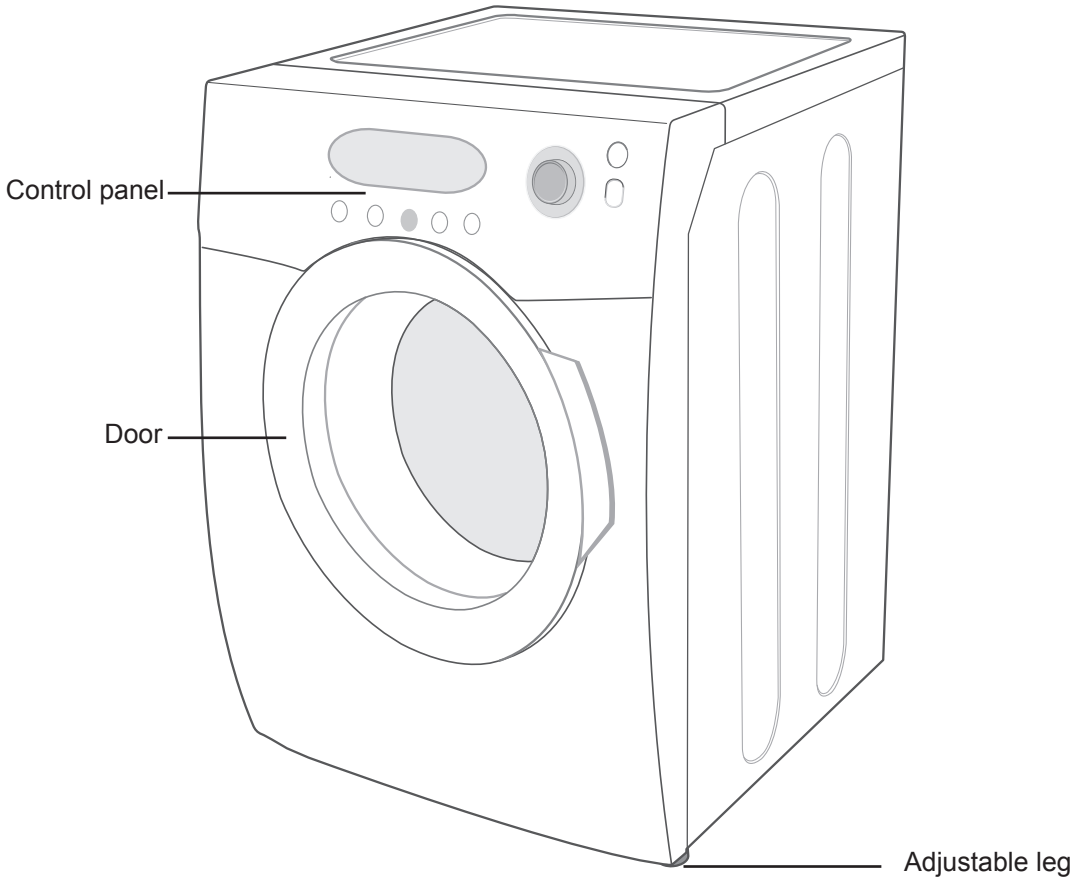

2-4. THE COMPARATIVE SPECIFICATIONS OF PRODUCT

Design				
Brand	Samsung	Lowe's/Best Buy	Lowe's/Best Buy	Lowe's/Best Buy
Model	DV337, DV328	DV316…	DV306…DV3C6…	DV206…
Capacity	7.3 cu.ft	7.3 cu.ft	7.3 cu.ft	7.3cu.ft
Dryer Type	Electric/Gas	Electric/Gas	Electric/Gas	Electric/Gas
Stackable	Yes	Yes	Yes	Yes
Matching Washe	DV337..., DV328...	WF316…	WF306…	WF206…
Display Type				
Heating Element	5300W / 22,000 BTU/hr	5300W / 22,000 BTU/hr	5300W / 22,000 BTU/hr	5300W / 22,000 BTU/hr
Voltage / Frequency	120/240V,120V /60Hz	120/240V,120V /60Hz	120/240V,120V /60Hz	120/240V,120V /60Hz
Drum Light	Yes	Yes	No	No
Number of Drying Cycle	9	9	7	7
Normal	Yes	Yes	Yes	Yes
Heavy Duty	Yes	Yes	Yes	Yes
Towels	Yes	Yes	No	No
Perm Press	Yes	Yes	Yes	Yes
Delicates	Yes	Yes	Yes	Yes
Extra Delicates	No	No	No	No
Quick Dry	No	No	No	No
Freshen Up	Yes	Yes	No	No
Time Dry	Yes	Yes	Yes	Yes
Wrinkle Release	Yes	Yes	Yes	Yes
Air Fluff	Yes	Yes	Yes	Yes
Number of Option	4	4	4	3
Adjust Time	Up/Down	Up/Down	Up/Down	Up/Down
My Cycle	Yes	Yes	Yes	Yes
Rack Dry	Yes	Yes	Yes	No
Wrinkle Prevent	Yes	Yes	Yes	Yes
# of Temp Level	5	5	3	3
# of Dryness Level	5	5	4	4
Sound Level	3	3	3	3
Control Type	Electric/Dial	Electric/Dial	Electric/Dial	Electric/Dial
Drum Material	STS Steel	STS Steel	Stainless/Paint coated	Stainless/Paint coated
Door Type	Glass Transparent	Glass Transparent	Glass Transparent	Glass Transparent
Vent Exhaust	3 way	3 way	3 way	3 way
Reversible Door	Yes	Yes	Yes	Yes

2-4. OPTION SPECIFICATIONS

Item	Item Name	CODE.NO	Remark
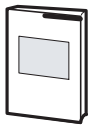	MANUAL-BOOK	DC68-02453A	
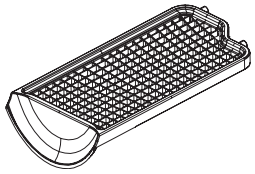	DIE-RACK DRY	DC61-01522A	

3. OPERRATING INSTALLATIONS AND INSTALLATION

3-1. OVERVIEW OF THE CONTROL PANEL

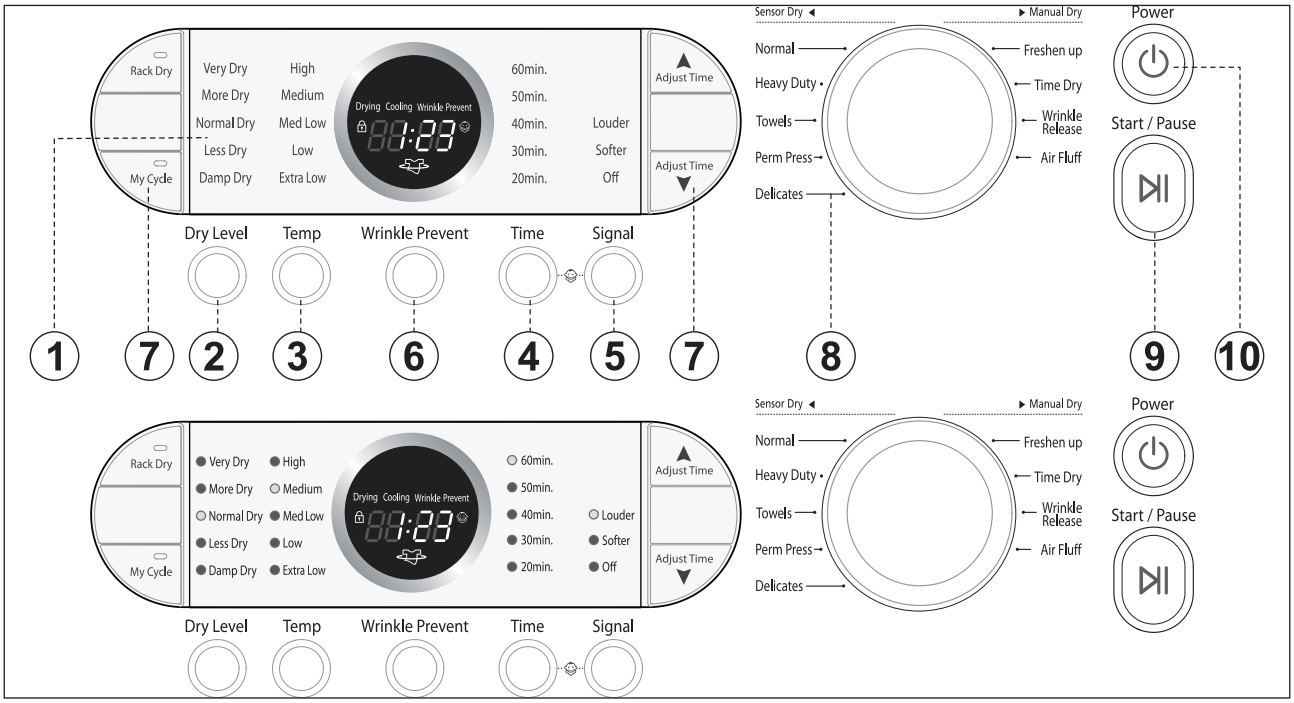

1. Digital Graphic Display

The display window shows the estimated time remaining in the cycle after the Cycle Selector dial is pressed. The estimated time remaining may fluctuate as the cycle progresses.
The Drying light will illuminate and remain lit until the cycle is complete.
When your dryer is in the cool-down phase, the Cooling light will illuminate.
When your dryer is in the wrinkle prevent phase, the Wrinkle Prevent light will illuminate.
When the cycle is complete, “END” will appear in the display panel until the dryer door is opened or Power key is pushed.
If your dryer is paused during a cycle, the indicator lights will blink until the Cycle Selector dial is pressed.

2. Dry Level Selection Button

To select the dry level in the Normal, Heavy Duty, or other Sensor Dry cycles, press the Dry Level button. An indicator light will illuminate next to the desired dryness level.
Press the button repeatedly to scroll through the settings. Larger or bulkier loads may require the Very Dry or More Dry setting for complete dryness.
The Less Dry setting is best suited for lightweight fabrics or for leaving some moisture in the clothing at the end of the cycle. Damp Dry is designed to partially dry items.
Use for items that lay flat or hang to dry.

3. Temp Selection Button

To select the correct temperature for the load, press the Temp button. An indicator light will illuminate next to the desired temperature. Press the button repeatedly to scroll through the settings.
High – For sturdy cottons or those labeled Tumble Dry.
Medium – For permanent press, synthetics, lightweight cottons, or items labeled Tumble Dry Medium.
Medium Low – For lower heat than Medium to dry synthetic or washable knit fabrics.
Low – For heat sensitive items labeled Tumble Dry Low or Tumble Dry Warm.
Extra Low – Provides the lowest heated dry temperature possible.

4. Time Selection Button

When using Manual Dry cycles, time can be adjusted by pressing the time selection button.
During the Sensory Dry cycle, the time light indicator is off because exact drying times are determined by fluctuating humidity levels.

5. Signal Selection Button

When the cycle is complete, a chime will sound.
When the Wrinkle Prevent option is selected, the chime will sound intermittently.
Adjust the volume of the chime or turn it off by pressing the Signal button.
Press the button repeatedly to scroll through the choices.

6. Wrinkle Prevent Selection Button

Wrinkle Prevent provides approximately 90 minutes of intermittent tumbling in unheated air at the end of the cycle to reduce wrinkling. Press the Wrinkle Prevent button to activate this feature.
The indicator light above the pad will illuminate when Wrinkle Prevent is selected.
The load is dry, and can be removed at any time during the Wrinkle Prevent cycle.

7. Select Cycle Option

Adjust Time – Time can be added or subtracted from the automatically set times in the Manual Dry cycles (Time Dry, Freshen Up, Delicates, Wrinkle Release, or Air Fluff cycles). To add or subtract time from the cycle, press the Adjust Time arrow pad up or down until the desired time is displayed.
My Cycle – Choose your favorite cycle including cycle, temp, dry level option, etc.
Rack Dry – Rack Dry is available at Time Dry cycle. Temperature will be set only to Extra Low.

8. Cycle Selector

To select a cycle, rotate the Cycle Selector dial to the desired cycle.
The indicator light by the cycle name will illuminate. The Normal, Heavy Duty, Towels, Perm Press and Delicates cycles are Sensor Dry cycles.
Sensor Dry automatically senses the moisture in the load and shuts the dryer off when the selected dryness level (very dry to damp dry) is reached.
Normal – Use this cycle to dry loads such as cotton, underwear, and linen.
Heavy Duty – Use this cycle to get high heat for heavy fabrics such as jeans, corduroys, or work clothes.
Towels – Dry loads such as bath towels.
Perm Press – Dry wrinkle-free cottons, synthetic fabrics, knits, and permanent press fabrics automatically. The cycle minimizes wrinkling by providing a longer unheated cool-down period at the end of the cycle.
Delicates – The Delicates cycle is designed to dry heat-sensitive items at a low drying temperature.
Freshen Up – This cycle removes odors and freshens garments.
Time Dry – Time Dry allows you to select the desired cycle time in minutes.
Turn the Cycle Selector dial to Time Dry, then press the Adjust Time up arrow to set the drying time.
Press the arrow repeatedly to scroll through the time settings.
Wrinkle Release – The Wrinkle Release cycle will release wrinkles from items that are clean, dry, and only slightly wrinkled, such as clothes from a crowded closet, suitcase or items that have been in the dryer too long after the cycle has ended. Wrinkle Release can be used with any temperature selection.
Air Fluff – The Air Fluff cycle tumbles the load in room temperature air.

9. Start/Pause Selection Button

Press to pause and restart programs.

10. Power Button

Press once to turn your dryer on, press again to turn it off. If your dryer is left on for more than 10 minutes without any buttons being touched, the power automatically turns off.

3-2. CYCLE CHART

Cycle		Default			Drying	Cooling	Wrinkle prevent
		Temp con-trol	Sensor dry level	Time	Time	Time	Time
Sensor Dry	Normal	High (Medium)	Normal dry	44 min	39 min	5 min	90 min
	Heavy Duty	High (No change)	Normal dry	60 min	55 min	5 min	90 min
	Towels	High (Me-dium)	Normal dry	52 min	47 min	5 min	90 min
	Perm Press	Medium Low (No change)	Normal dry	34 min	24 min	10 min	90 min
	Delicates	Low (No change)	Normal dry	29 min	24 min	5 min	90 min
	Extra Delicates	Extra Low (No change)	Normal dry	29 min	24 min	5 min	90 min
Manual Dry	Freshen Up	High (No change)	-	30 min	25 min	5 min	-
	Time Dry	High	-	40 min	35 min	5 min	-
	Wrinkle Release	Medium	-	25 min	20 min	5 min	-
	Air Fluff	- (No change)	-	20 min	-	20 min	-
	Quick Dry	High	-	30 min	25 min	5 min	-

3-3. MAIN FUNCTION

CHILD LOCK

A function to prevent children from playing with your dryer.

SETTING/RELEASING

If you want to set or release Child Lock, press both the Time and Signal buttons at the same time for 3 seconds.

How to Set:

1. It can be set while your dryer is running.
2. Once you set the Child Lock function, no button, except for the Power button, can be controlled until you release the Child Lock function.
3. The Child Lock indicator will be lit.

Notice:

1. If the power is on again, the Child Lock function remains unchanged.
2. To release that function, follow the instructions above.

Notice:

When other buttons, except for the Power button, do not respond, check the Child Lock indicator.

MY CYCLE

Lets you activate your customized cycle that includes Dry Level, Temp, Time option, etc.

By pushing the My Cycle button, you activate the settings used during the previous My Cycle mode.
(Default : Normal Cycle)
If My Cycle mode is activated, My Cycle button will be lit.

You can select all options in My Cycle mode as follows.

1. Select cycle using Cycle Selector dial.
2. After cycle selection, set each option.

Note: At this time, the option will follow as per each cycle's default option selection.

Then you can start My Cycle by pushing the Start/Pause button in My Cycle mode.
The cycle and options you select will be displayed next time you choose My Cycle.

Rack Dry

INSTALLING THE DRYING RACK

1. Open dryer door.
2. Position drying rack in tumbler, placing the rear legs in the two recessed areas of the dryer's back wall.
3. Place the front lip of the drying rack on top of the lint filter.
4. Place items to be dried on the rack, leaving space between them so air can reach all surfaces.
5. Close dryer door.
6. Use the Time Dry cycle. Select time according to moisture and weight of the items. Start dryer.

It may be necessary to reset the timer if a longer drying time is needed.

SUGGESTED ITEMS	SUGGESTED TEMP. SETTINGS
Washable sweaters (block to shape and lay flat on rack)	Heat (Low/Extra Low)
Stuffed toys (cotton or polyester fiberfilled)	Heat (Low/Extra Low)
Stuffed toys (foam or rubber-filled)	Air Fluff
Foam rubber pillows	Air Fluff
Sneakers	Fluff or Heat

WARNING – Drying foam rubber, plastic, or rubber on a heat setting may cause damage to the item and lead to a fire hazard.

3-4. DESIGNATION OF MAIN COMPONENTS

3-4-1. Heater

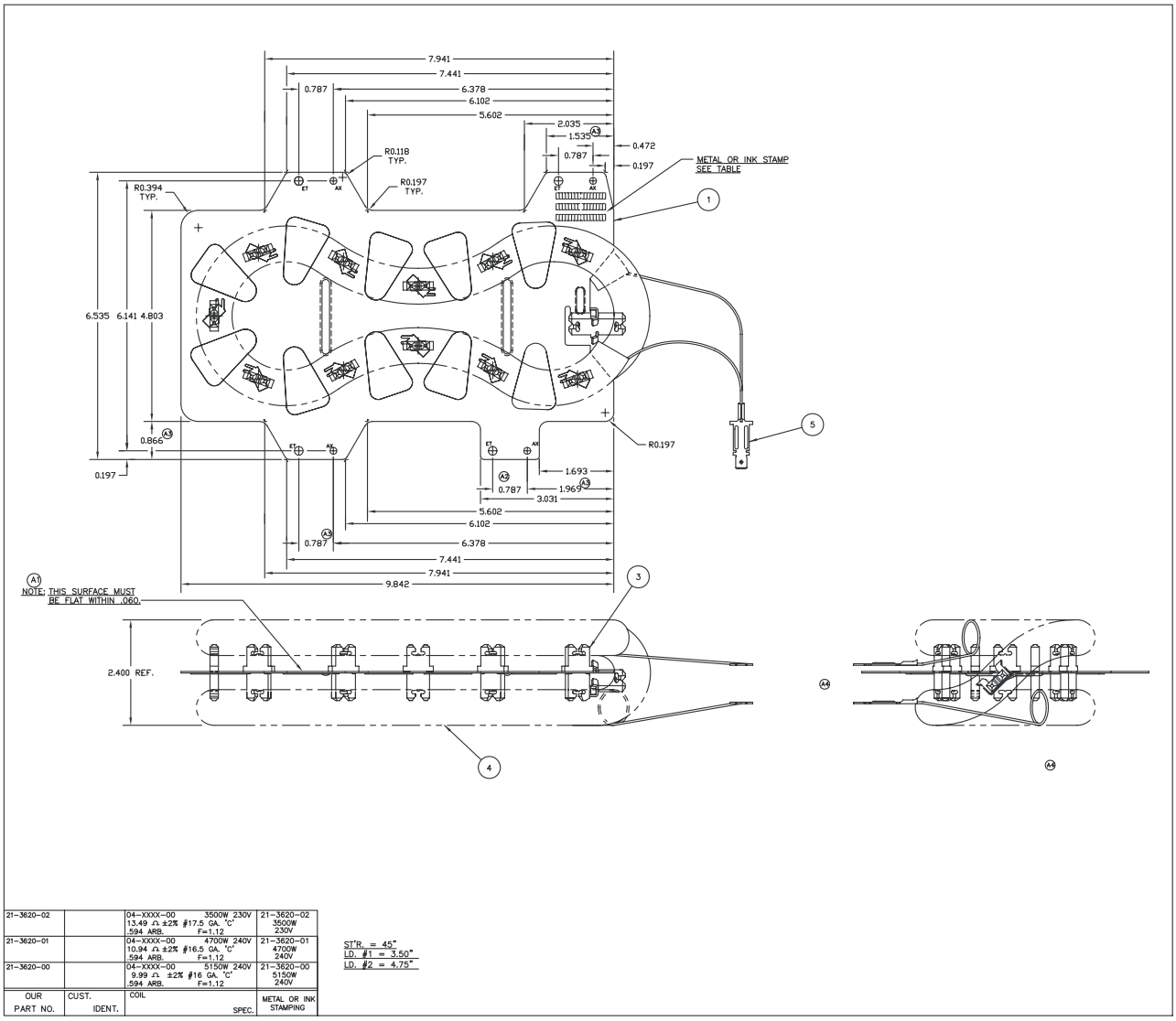

OUR PART NO.	CUST. IDENT.	COIL SPEC.	METAL OR INK STAMPING
21-3620-02		04-XXXX-00 3500W 230V 13.49 Ω ±2% #17.5 GA. "C" .594 ARB. F=1.12	21-3620-02 3500W 230V
21-3620-01		04-XXXX-00 4700W 240V 10.94 Ω ±2% #16.5 GA. "C" .594 ARB. F=1.12	21-3620-01 4700W 240V
21-3620-00		04-XXXX-00 5150W 240V 9.99 Ω ±2% #16 GA. "C" .594 ARB. F=1.12	21-3620-00 5150W 240V

ST'R. = 45°
I.D. #1 = 3.50"
I.D. #2 = 4.75"

3-4-2. Motor

NO	item	spec	NO	item	spec
1	rated	120V 60Hz	6	CAPACITOR	–
2	CORE	□133	7	AIR GAP	–
3	stator	24 mm	8	SKEW	–
4	coil Φ,TURN	Main : Φ1.0 Sub : Φ0.75	9	END RING	–
5	resistance(Ω)	COM–MAIN : 3.5Ω	10	resistance(Ω)	COM–SUB : 2.88Ω

MOTOR : 120V 60Hz

1. No Load Test

Item		SPEC	C.C.W(Pulley side)			$\overline{X}$	Judge
			#1	#2	#3	C.W	
Input Power(W)		190 ↓	159.0	165	158	160.7	PASS
Input Current(A)		4.9 ↓	4.367	4.375	4.289	4.344	PASS
RPM		1750↑	1785	1784	1784	1784	PASS
Noise(dB)		50↓	49.1	48.7	49.3	49.03	PASS
Starting Voltage(V)		50 ↓	21	23	22	22.0	PASS
Centrifugal Switch	close	1350±75rpm	1309	1315	1310	1311.0	PASS
	open	870±100rpm	857	850	864	857.0	PASS
Abnormal	Input Power(W)	5000 ↓	4451.0	4338.0	4494.0	4427.7	PASS
	Input Current(A)	46 ↓	40.930	39.770	41.520	40.740	PASS
	PROTECTOR	Normal	OK	-	-	OK	PASS

2. Rated Load Test

Item		SPEC(WASH)	Dryer			$\overline{X}$	Judge
			#1	#2	#3	Wash	
Motor	Input Power(W)	400 ↓	332.0	354.7	340.0	342.2	PASS
	Input Current(A)	5.0 ↓	4.357	4.458	4.388	4.401	PASS
Heater	Input Power(W)	5700 ↓	5149	5150	5147	5149	PASS
	Input Current(A)	24 ↓	21.54	21.54	21.53	21.54	PASS
Total	Input Current(A)	27 ↓	24.57	24.72	24.62	24.64	PASS
DRUM_RPM		49 ± 3	48.5	48.7	48.6	48.6	PASS
Temperature Rise(deg)_UL		95deg ↓	85	82	83	83.3	PASS
Temperature Rise(deg)_IEC		95deg ↓	88	91	89	89.3	PASS

3. Disassemble Inspection

item	#1	#2	#3	Judgment
each part normal test	OK	OK	OK	PASS

4. Reference

4-1 temperature rising test CONDITION

:IEC(Rated voltage*1.06(V), Rated Frequency, Time dry 60m, towel 7.2kg, 3cycle)

:UL(Rated voltage, Rated Frequency, Time dry 60m, towel 6.6kg, 3cycle)

5. Mechanical Dimension

spec	174.6±1.57	24.7±0.89	40.0±0.89	55±0.89	10.01 (+0.05 -0.1)	12.7 (+0 -0.01)	8.2±0.13	18.24±1.4
1	174.04	24.66	40.16	55.14	10.004	12.689	8.247	19.15
2	174.66	24.46	40.06	54.83	10.031	12.687	8.277	18.62
3	174.24	24.69	40.16	54.88	9.995	12.688	8.222	19.03
4	174.69	24.51	40.17	54.82	10.049	12.688	8.233	18.57
5	174.34	24.06	40.08	54.93	10.057	12.687	8.225	18.89

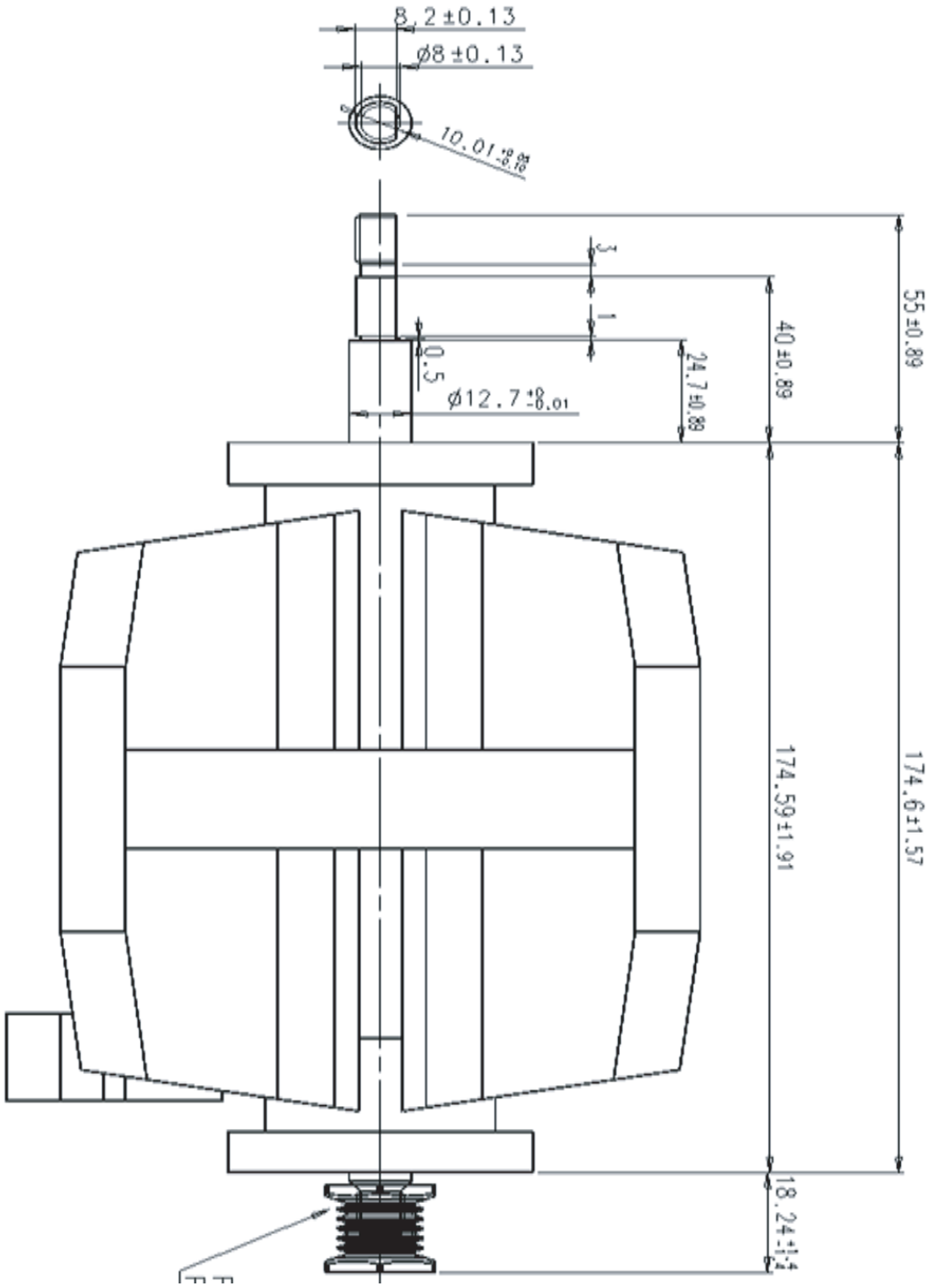

4. ALIGNMENT AND ADJUSTMENTS

4-1. ERROR ITEMS AND DIAGNOSTIC CODES

1. An occurrence of an Error will make a sound of error melody for 5sec and continuously show one of the Error Displays from the following errors.

Display	Description	Trigger	Action Taken
tS	Dryer Thermistor Short Sensed	The Thermistor resistance is very low.	Check for: - Clogged lint screen. - Restricted vent system. - Check Thermistor resistance.
tO	Dryer Thermistor Open Sensed	The Thermistor resistance is very high.	Check for: - Clogged lint screen. - Restricted vent system. - Check Thermistor resistance.
do	Door Open	Running the dryer with door open	Check for: - Close the door, and run the dryer - Loose or open wire terminals in Door Sense circuit.
FE	Power source frequency Error	Invalid power source Frequency	Check for: - Not using regular power source frequency - Invalid power frequency sense circuit
dF	Door Circuit Failure	Invalid state for more than 256 milliseconds	Check for: - Loose or open wire terminals in Door Sense circuit.
hE	Heater Error	Invalid heating Temp in running the dryer	Check for: - Restricted vent system. - Check Thermistor resistance.
bE	Button Error	Invalid state of key circuit short for 75secs	Check for: - Display PCB key circuit short or not
od	Over Dry	Invalid Dry time in excess Dry time	Check for: - Sensor bar Open - using Adjust time Up excessively
Et	EEprom Fail	Invalid state of Eeprom communication	Check for - PCB on EEprom circuit

4-2. TEST MODE

4-2-1. Continuous Run Mode

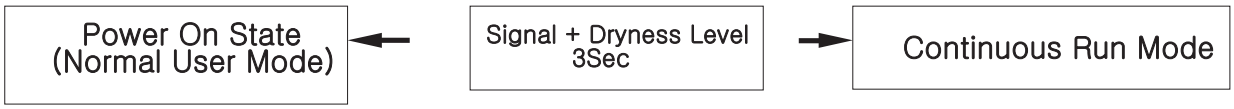

Continuous Run Mode:

1. Press Signal + Dryness Level for 3 sec during Power On State (Normal User Mode) .
2. Once in Continuous Run Mode, 7-Segment will toggle display “cc” and the remaining time.
3. The previous cycle will restart during Continuous Run Mode until continuous run mode is disabled.
4. During Continuous Run Mode, press Signal + Dryness Level for 3 seconds to return to normal user mode. 7-segment will no long display “cc” and only display the remaining time.

4-2-2. Special Test Mode

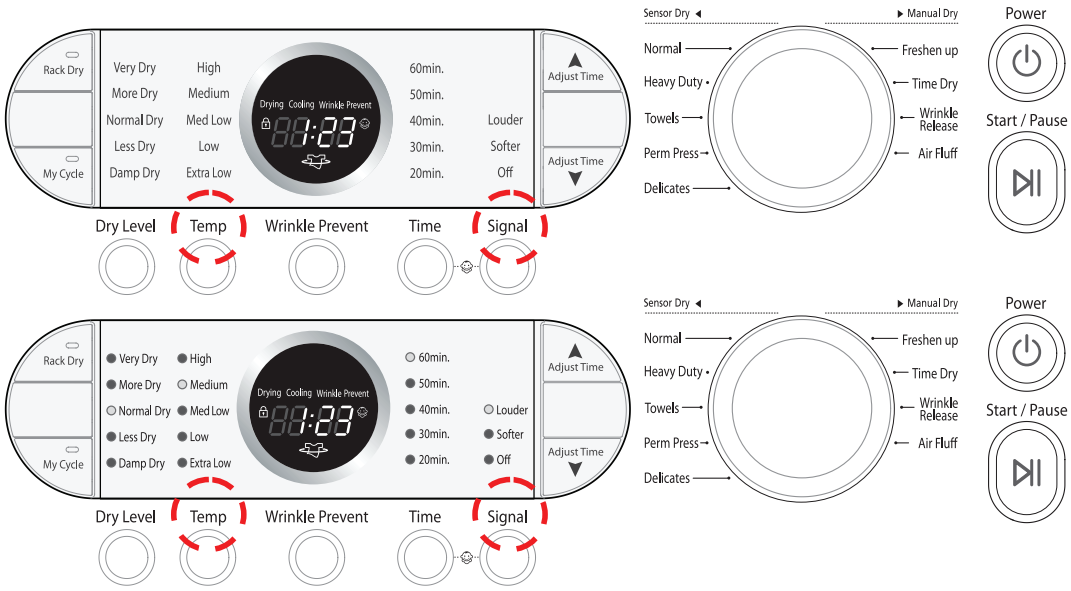

Definition of Special Test Mode:

- Dryer must be on before Service Mode can be entered.
- Press Signal and Temp Keys for 3 seconds, or until 3 beeps are heard.
- The machine will now be in Service Mode.
- Upon entry into Service Mode, the Sensor Bar Touch Data will be shown (Default Special Test Mode).

How to Enter:

- To enter Special Test Mode press Signal and Temp Keys for 3 seconds for 3 seconds or until the control beep.
  (same for all Frontier models.)

4-2-3. Sensor Bar Touch Data Mode

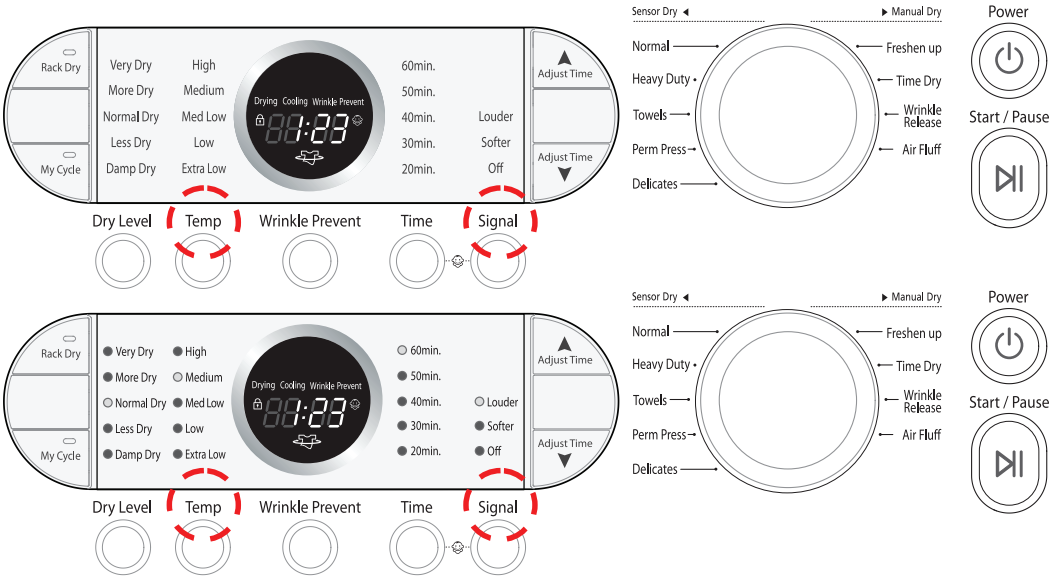

Definition of Sensor Bar Touch Data Mode:

-While in Power On pressing Signal and Temp Keys for 3 seconds

-This action will put the dryer into sensor bar touch data mode

- Dryer will display Sensor Bar data. This mode is default mode of entering service mode

How to Enter:

- While in Power off pressing Signal and Temp Keys for 3 seconds (same for all Frontier models.)

4-2-4. Cycle Count Mode

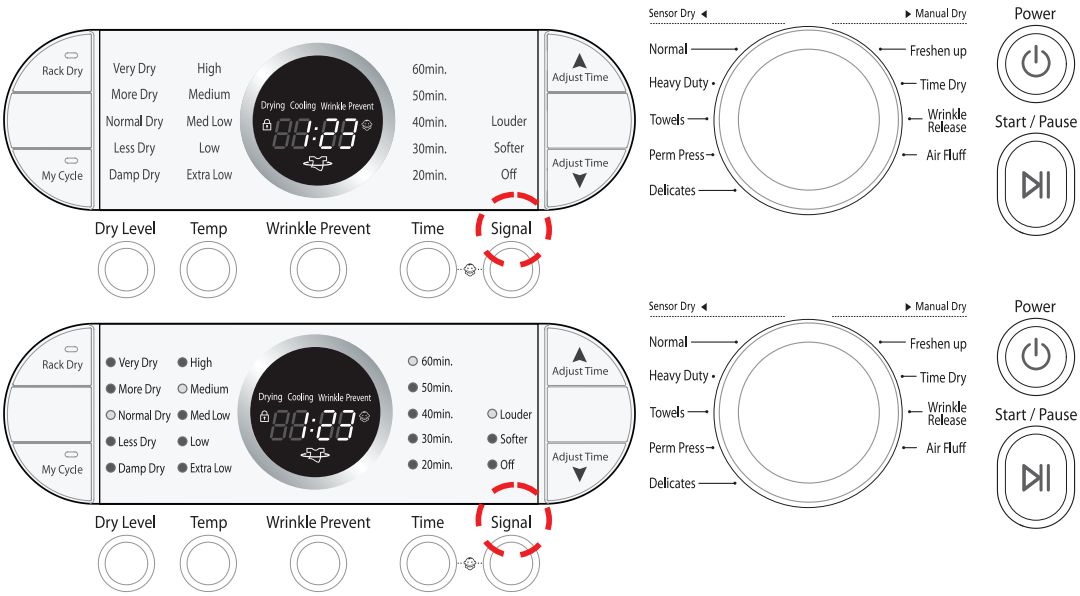

Definition of Cycle Count Mode:

- While in Service Mode pressing the Signal key will put the dryer into the cycle count mode

- Cycle number executed will display.

How to Enter:

- To enter Special Test Mode press While in Service Mode pressing the Signal key for 3 seconds or until the control beep.

(same for all Frontier models.)

4-2-5. Software Version Mode

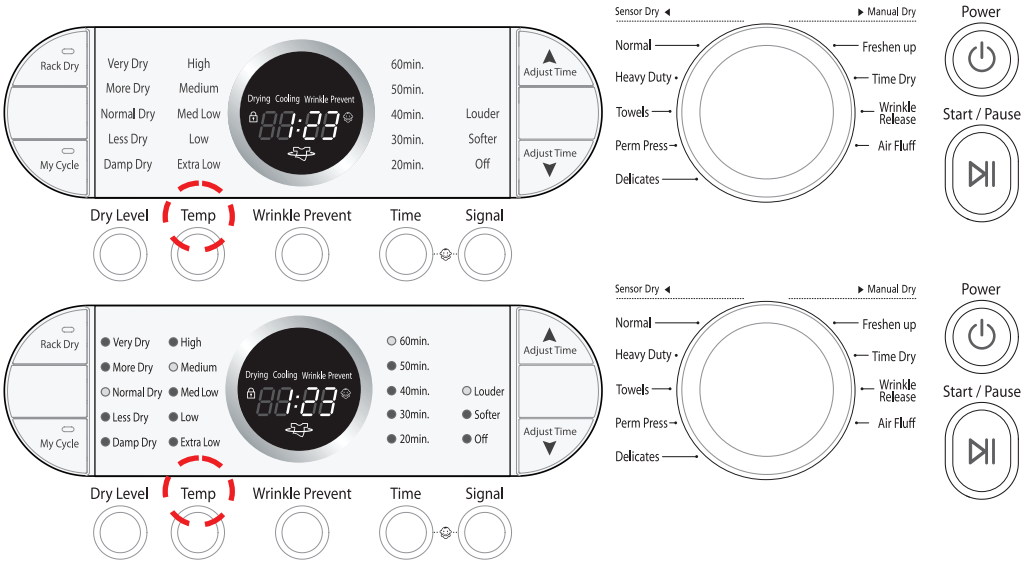

Definition of Software Version Mode:

- While in Service Mode pressing the Temp key will put the dryer into the software version mode

How to Enter:

- To enter Special Test Mode press Temp Key until the control beep.
  (same for all Frontier models.)
  ex) In case of “U105”, U0 means major version “v1“ 05 means minor version “05”

4-2-6. System Check Mode

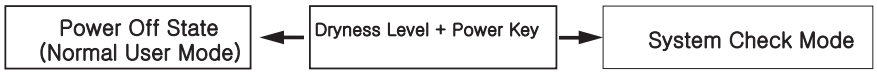

Special Test Mode:

- While in Power Off, pressing the Dryness Level + Power keys simultaneously will put the dryer into the System Check mode
- “ t2 “ will display.
- System Check Mode Progress

t2 mode Function Performed Start/Pause Motor(CW) Relay On → Heater Relay On → Heater Relay Off → Motor(CW) Relay Off (Circulation)

5. ASSEMBLY AND DISASSEMBLY

5-1. TOOLS FOR DISASSEMBLY AND ASSEMBLY

NO.	TOOL		
1	Box driver	10mm 13mm 19mm	Heater (1) Motor (1), Balance (5), 2 holes of each left and right of the shock absorber 1 Pulley hole
2	Double-ended spanner	10, 13,19mm	Replaceable for the box driver. Since the bolt runs idle when the box driver is used, use the box driver 17mm.
3	Vice pliers		Tool to protect the idle and abrasion of the bolt for the box driver.
4	Other(Driver, Nipper, Long nose)		General tools for the after service.
5	JIG for the Tub		1 (Disassemble and Assemble)

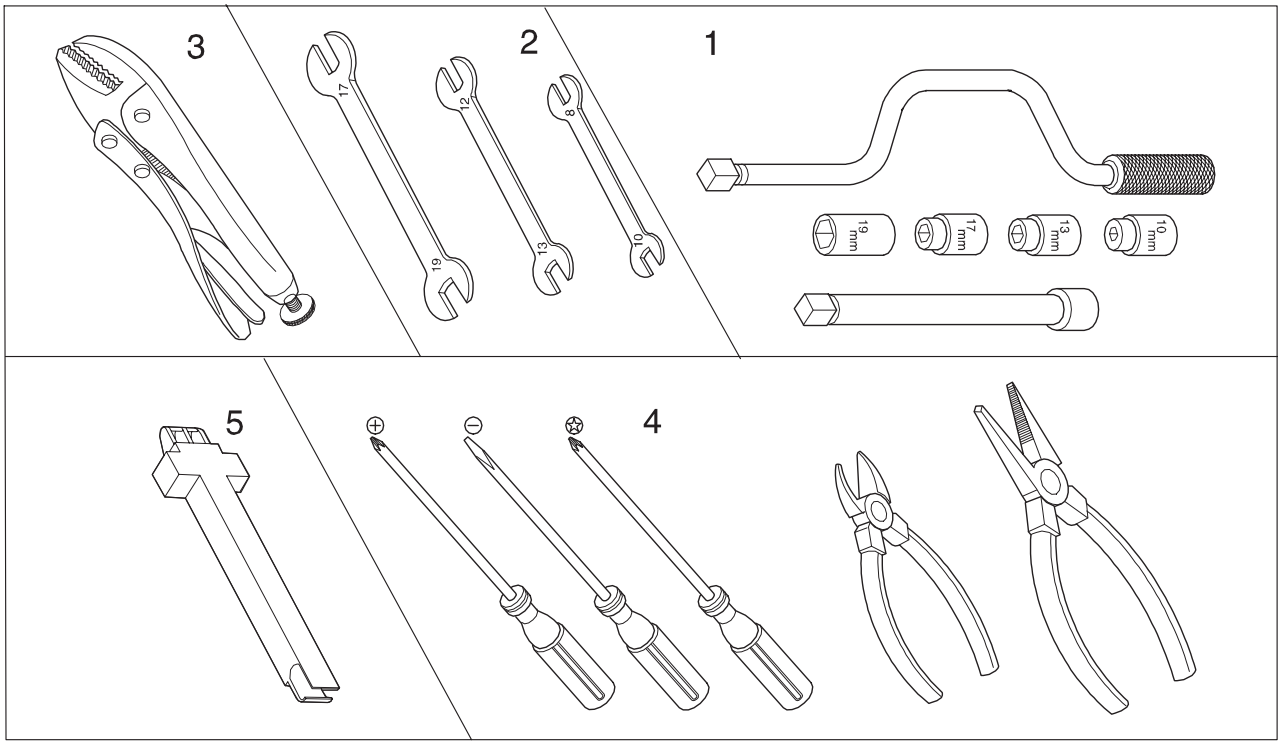

5-2. DISASSEMBLY

Warning! To avoid risk of electrical shock, personal injury or death, disconnect the power to the washing machine.

Part Name	Descriptive Picture	How To Do
Top Cover Removal		1. Remove the back cover and unfasten the screws that hold the main PCB in place. 2. Remove 2 screws Top-Cover
		3. Slide Top Cover towards the rear and lift from unit. ► Scratch and impact to top cover prohibited.
Main PCB Removal	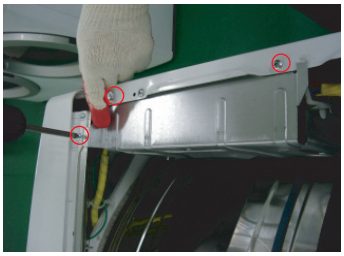	1. Disconnect Power Supply to Unit 2. Remove Top Cover 3. Remove 3 screws Fame+Plate(u)
	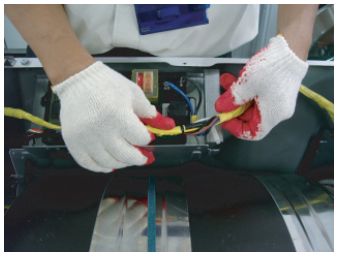	4. Remove Wire holder
	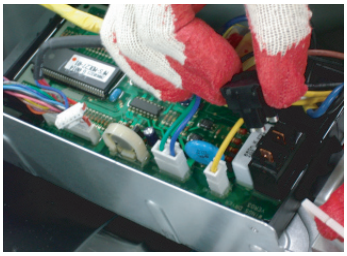	5. Remove Housings
	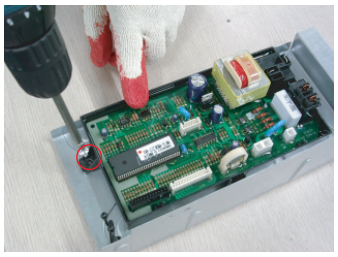	6. Remove 1 Screw Holder PCB ► Shaking the heater terminal side ways to pull out is prohibited.

Part Name	Descriptive Picture	How To Do
Console Removal	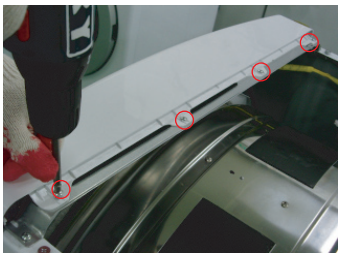	1. Disconnect Power Supply to Unit 2. Remove Top Cover,Main PCB 3. Removal 4 Screw Console
		4. Removal Console
	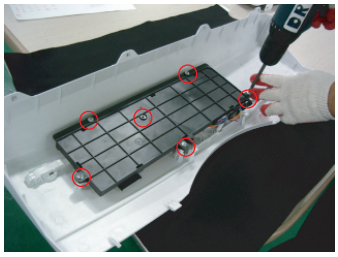	5. Removal 6 Screw Guide PCB
	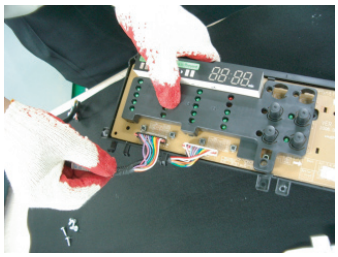	6. Disconnect the black and white connectors. (Sub Housing 13pin And 12 Pin) ► Be careful of external scratch on the console.
Door Removal		1. Door Opening 2. Remove 2 Screw Frame Panel 3. Separate the temporary fixation part of the assembly door.
	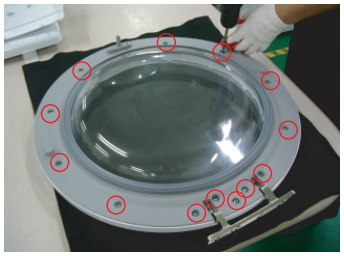	4. Remove 13 Screw Holder Glass

Part Name	Descriptive Picture	How To Do
Door Removal	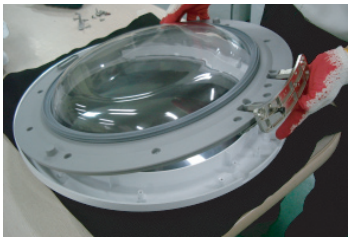	5. Remove Door Cover
	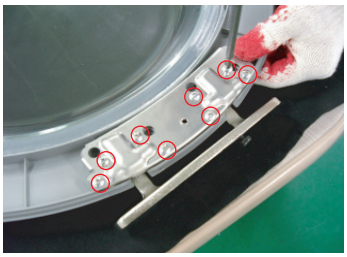	6. Remove 8 Screw Support-Hinge
	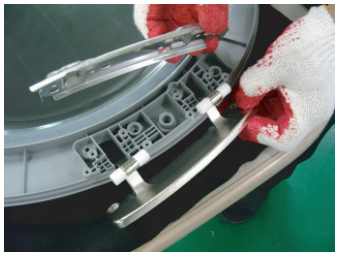	7. Remove Hinge,Support-Hinge
		8. Removal Door Seal,Glass ► 1. Be careful of the external scratch on the door cover. 2. Be careful of the damage to the door glass. 3. Check the door seal condition after the assembly.

Part Name	Descriptive Picture	How To Do
Frame Panel Removal		1. Disconnect Power Supply to Unit 2. Remove Top Cover, Console 3. Remove 2 Screw Frame Front
		4. Remove 4 Screw Plate(u)
		5. Remove Door Switch Housing
	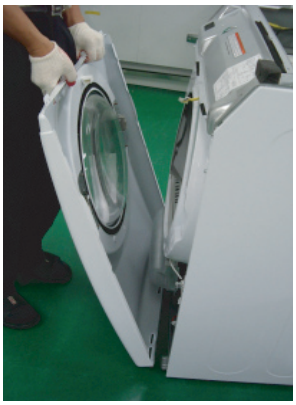	6. Lift the Front Panel off the three tabs across the bottom and remove ► Always wear the protective gloves.

Part Name	Descriptive Picture	How To Do
Plate Removal	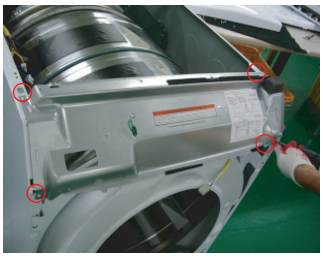	1. Disconnect Power Supply to Unit 2. Remove Top Cover, Console, Front Panel 3. Removal 4 Screw Plate(u)
		4. Removal 1 Screw Ring-Earth
		5. Separate Wire in Wire Holder
Front Bulkhead Removal		1. Disconnect Power Supply to Unit 2. Remove Top Cover, Console, Front Panel, Plate(u) 3. Separate Wire in Wire Holder(2EA) 4. Disconnect Interior Light wiring Harness
		5. Remove four Bulkhead retaining 5 screws.
		6. Disconnect Moisture Sensor wiring Harness

Part Name	Descriptive Picture	How To Do
Front Bulkhead Removal		7. Lift Bulkhead from Cabinet and Remove
		8. Removal 2 Screw Duct Outlet
	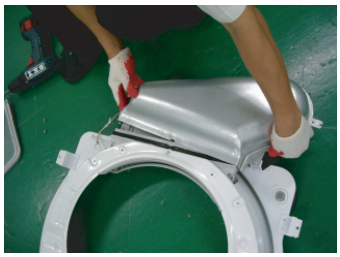	9. Removal Duct Outlet
	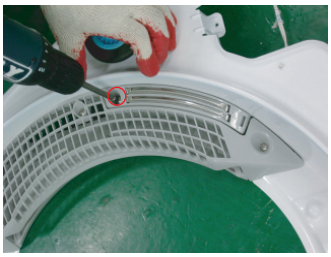	10. Removal 1 Screw Touch Sensor
		11. Removal Touch Sensor
		12. Removal Roller

Part Name	Descriptive Picture	How To Do
Front Bulkhead Removal		13. Removal 2 Screw Case Filter(B)
	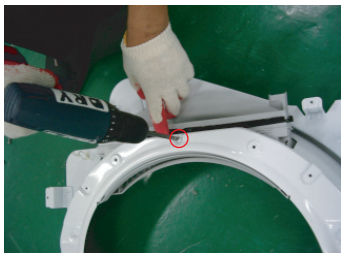	14. Removal 1 Screw Case Filter(F)
		15. Removal Case Filter(B/F) ► Make sure the felt does not get folded to the roller.
Drum Removal	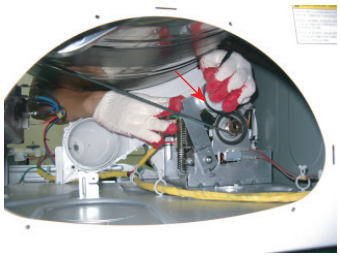	1. Disconnect Power Supply to Unit 2. Remove Top Cover, Console, Front Panel, Plate(u),Front Bulkhead 3. Remove Belt
	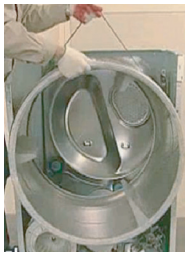	4. Remove Drum

Part Name	Descriptive Picture	How To Do
Sensor (Thermistor, Thermostat) Removal	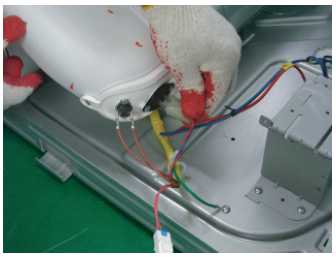	1. Disconnect Power Supply to Unit 2. Remove Top Cover, Console, Front Panel 3. Remove 2 Housing Sensor
	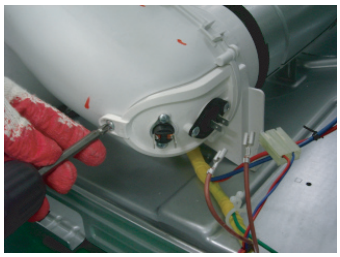	4. Remove Sensor Cover
		5. Remove Sensor ► Do not apply excessive pressure to the terminal.
Heater Removal		1. Disconnect Power Supply to Unit 2. Remove Top Cover, Console, Front Panel 3. Removal 6 Housing Heater-Terminals
	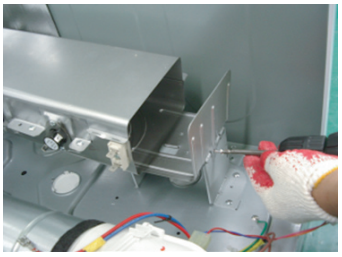	4. Removal 1 Screw Heater Die
		5. Separate Heater in Drum back

Part Name	Descriptive Picture	How To Do
Heater Removal		6. Removal 4 Screw Thermostats ► Do not apply excessive pressure to the terminal.
Assy Motor Removal	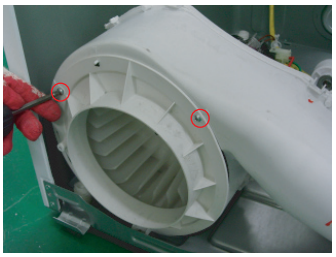	1. Disconnect Power Supply to Unit 2. Remove Top Cover, Console, Front Panel, Plate(u),Front Bulkhead, Drum 3. Remove 2 screw Duct Connector
		4. Separate Duct Connector
	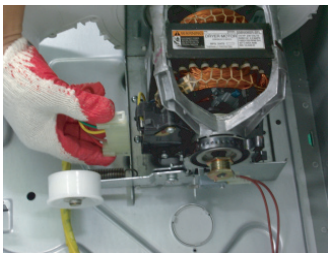	5. Removal 1 Housing Motor
	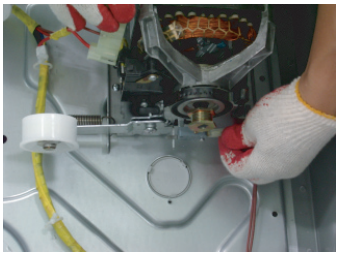	6. Removal 2 Housing Belt Cut Off Switch
	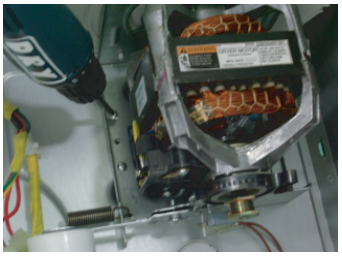	7. Remove 2 Screw Motor-Bracket

Part Name	Descriptive Picture	How To Do
Assy Motor Removal		8. Remove 2 Screw Cover-Duct Fan
		9. Separate Assy Motor in Bottom Plate
		10. Removal 1 Nut Fan
		11. Removal Fan
	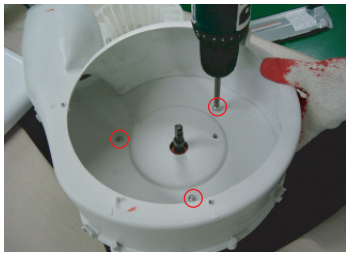	12. Removal 3 Screw Cover-Duct Fan
		13. Removal 2 Spring Plate

Part Name	Descriptive Picture	How To Do
Assy Motor Removal	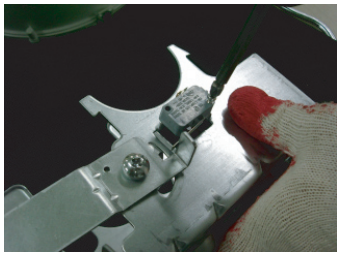	14. Removal 1 Screw Belt Cut Off Switch
	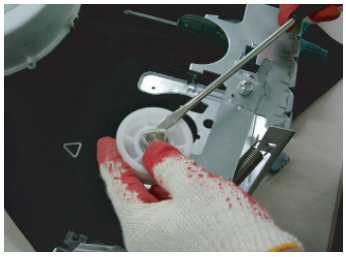	15. Removal Holder Shaft
		16. Removal Roller-Idler
Drum Back Removal		1. Disconnect Power Supply to Unit 2. Remove Top Cover, Console, Front Panel, Plate(u),Front Bulkhead,Drum 3. Remove 7 Screw Drum-Back
		4. Separate Wire in Wire Holder
		5. Separate Assy-Drum Back in Frame

Part Name	Descriptive Picture	How To Do
Drum Back Removal	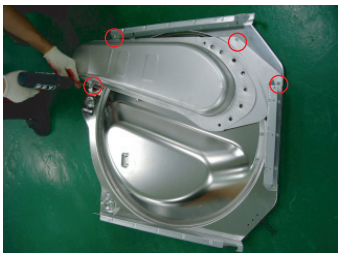	6. Remove 4 Screw Air Duct ► Be careful of the frame edge.
Duct Exhaust Removal		1. Disconnect Power Supply to Unit 2. Remove 4 screw Back-Cover
		3. Remove 1 screw Duct-Exhaust
- Reassembly procedures are in the reverse order of dissasembly procedures.		

6. TROUBLE SHOOTING

6-1. TROUBLE DIAGNOSIS

- As the micom dry machine is configured of the complicate structure, there might be the service call.
  Below information is prepared for exact trouble diagnosis and suitable repair guide.

Caution for the Repair and Replacement

Please follow below instruction for the trouble diagnosis and parts replacement.

1) As some electronic components are damaged by the charged static electricity from the resin part of wash machine or the human body, prepare the human body earth or remove the potential differ ence of the human body and wash machine by contacting the power supply plug when the work contact ing to PCB is executed.

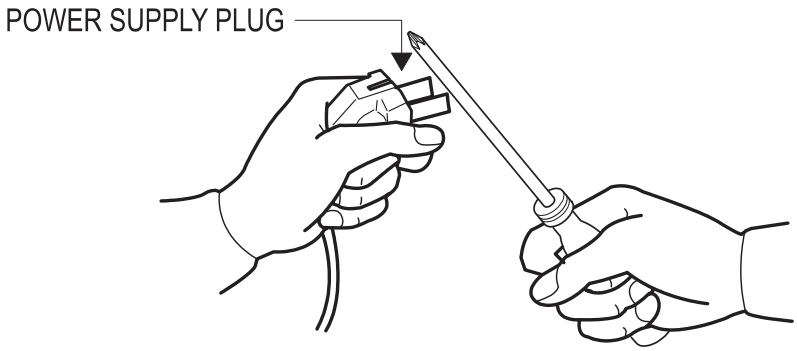

2) Since AC220~240V is applied to the triac T1 and T2 on P.C.B, the electric shock may occur by touching and be careful that the strong and weak electricity are mixed.

3) As the P.C.B assembly is designed for no trouble, do not replace the P.C.B assembly by the wrong diagnosis and follow the procedure of the trouble diagnosis when the micom is not op erated normally.

No	Problem	What To Do
1	Will Not Start or Run	• All wires are hooked up to their corresponding terminals. • Dryer is plugged in. • Blown fuse or circuit breaker. • Door switch functional...door closed. Check for error code 3 (See Table for code definition). • Start/Pause rotary selector dial functional. • Control Board operational. • Belt off or broken and Belt Cut-off Switch operates. • Drive motor functional. • Check motor winding resistance: 2.88ohms between pin #3 and 4, 3.5ohms between pin #4 and 5.
2	Motor runs/ tumbler will not turn	• Belt off or broken/damaged. • Idler tension spring too weak or stretched. • Idler pulley jammed or stuck.
3	Runs a few minutes and then stops	• Lint buildup around drive motor. • Low voltage present. • Blower impeller blocked in blower housing. • Drive motor - start switch contacts stuck closed.
4	Blows fuses or trips circuit breaker	- Is the belt connected well? - Is the winding of the motor continuous? (Rotor winding, stator winding, generator) - Is the motor protector normal? • If above points are not found, the PCB assembly is out of order. Replace it.
5	Blows fuses or trips circuit breaker (Gas Model)	• During ignition the dryer will draw X amps. With the burner ON, the dryer will draw X amps. If the dryer is drawing amperages above this, then the house wiring, fuse box or circuit breaker is suspected to be at fault. • Igniter harness loose and shorted to base. • Incorrect wiring or wire shorted to ground. • Drive motor winding shorting to ground.
6	Will not heat (motor runs)	Open heating element. • Hi-Limit trips easily or is open. • Regulating thermostat trips easily or is open. • Membrane switch open. • Check Thermistor.
7	Will Not Dry Gas Model Poor Gas Ignition	When the dryer is operated on a heat setting, the igniter should be energized and burner shall fire within 45 seconds at 120 VAC. The failure of a component in this system will usually be indicated by one of three symptoms:
8	The igniter does not glow	If the igniter does not heat up, remove power and using an ohmmeter, check the following: • Open flame sensor • Open igniter • Shorted booster coil • Open wiring • Bad motor switch (Neutral supply) • No power from control (L1 supply)
9	Igniter glows - No gas ignition	If the igniter heats up but the main burner flame is not ignited, remove power and using an ohmmeter, check the following: • Open secondary coil • Open holding coil • Open wire harness • Stuck flame sensor (Stuck closed)
10	The gas is ignited but the flame goes out	If a normal ignition takes place and after a short while the flame goes out, check for the following: • Radiant sensor contacts opening prematurely. • Weak gas valve coil may open when stressed by higher Temps. • Weak Hi-Limit • Poor venting • Bad drum seals
11	Improper drying clothes wrinkled Rough texture long dry time	• Lint filter is not clean. • Restriction in exhaust. • Outside exhaust hood damper door stuck closed. • Exhaust too long, too many elbows, flex ductwork installed. • Poor intake air available for the dryer. • Incorrect tumbler speed. Tumbler belt slipping. • Blower impeller bound; check for foreign material in blower area. • Customer overloading dryer. • Check clothing labels for fabric content and cycle selected. • Clothes too wet due to insufficient spin out by washer.
12	Noisy and/Or Vibration	• Thumping Check for loose tumbler baffle, rear tumbler roller(s) worn or misaligned, out-of-round tumbler or high weld seam on tumbler. • Ticking Check for loose wire harness or object caught in blower wheel area. • Scraping Check for front or rear bulkhead felt seal out of position or worn tumbler front bearings. • Roaring Check for blower wheel rubbing on blower housing or bad motor bearings. • Popping or squealing sound. Check for a sticky or frayed belt.

6-2. SYMPTOMS, DIAGNOSES AND ACTIONS

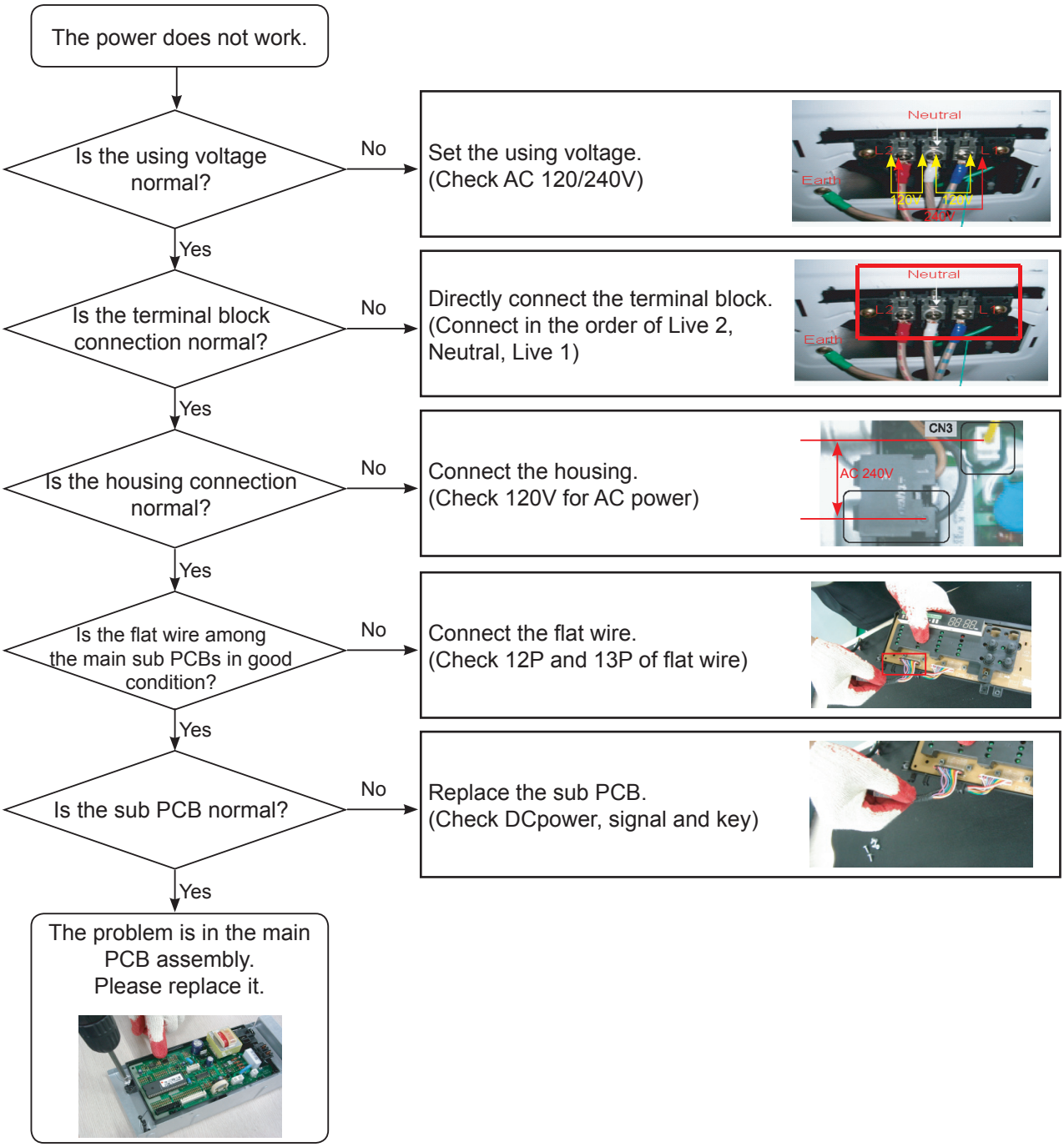

The drum does not work.

Is the Start button on?

- No → Press the Start button. (Start/Pause is repeated)

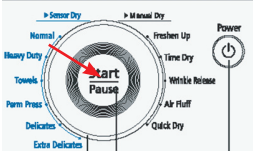

- Yes ↓

Is the door closed normally?

- No → Close the door. (Check whether the door S/W is pressed)

- Yes ↓

Is the connection to the door S/W normal?

- No → Check the wire connection of the power supply. (Check the contact point and connected condition of the door S/W)

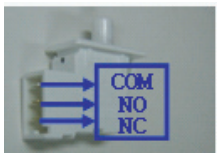

- Yes ↓

Is the thermostat normal?

- No → Check the connected condition and on condition. (Normal: Check whether it is 0Ω when the power is unplugged)

- Yes ↓

Is the connected condition of the belt normal?

- No → 1. Check the belt cut S/W and connected condition. (Normal: Check whether it is 0Ω when the power is unplugged) 2. Check the connected condition of the motor, idler and drum belt.

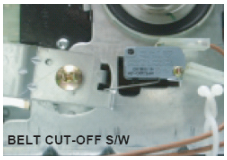

- Yes ↓

Is the motor normal?

- No → 1. Check whether the motor protector is operating. (Check for overload, drum constraint, centrifugal S/W etc.)

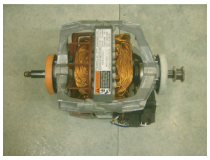

- Yes ↓

The problem is in the PCB assembly. Please replace it.

The clothes are not dried.

Is the vent normally installed?

No → Install the vent so that it is not blocked to the outside.
(Check the exhaust hole)

Yes ↓

Did you clean the filter before drying?

No → Clean the filter.
(Check if there are any alien particles in the filter)

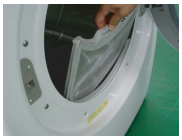

Yes ↓

Is the terminal block connection normal?

No → Connect the terminal block properly.
(Check the connection of Live 2, Neutral, Live 1)

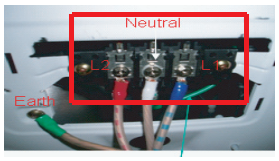

Yes ↓

Is the touch sensor normal?

No → Connect the touch sensor.
(Check the PCB and touch sensor)

Yes ↓

Is the Tamp. Sensor normal?

No → Replace the thermistor
(Check the connection between the PCB and termistor and check for any disconnection)

Yes ↓

Is the safety, Hi-limit thermostat normal?

No → Check the Safety, Hi-Limit thermostat
(Check the cause of safety being off)

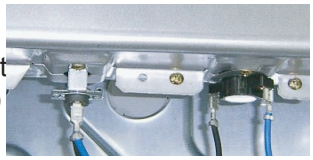

Yes ↓

Is the heater normal?

No → Replace the heater
(Remove the power and check whether the heater coil has a resistance of about 10Ω)

Yes ↓

The problem is in the PCB assembly.
Please replace it.

The lamp does not work.

Is the door S/W structurally on/off?

No → Replace the door S/W.
(Door operation of door S/W)

Yes ↓

Is the power connection normal?

No → Connect the power properly.
(Check the connection of terminal block and door S/W)

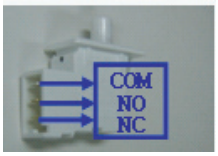

Yes ↓

Is the lamp socket normal?

No → Replace the lamp socket.
(Check for damage of lamp socket or lamp connecting part)

Yes ↓

Is the lamp normal?

No → Replace the lamp.
(Check for disconnection of lamp, socket and missed assembly)

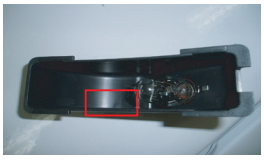

Yes ↓

Check if the input voltage is properly coming in.

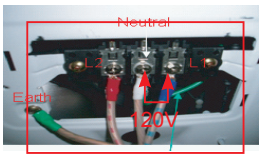

There is an abnormal noise in the dryer.

Do you hear a whistling sound from the door seal?

No →

Reassemble the door seal.
Check the assembled condition of the door seal and check the door lever)

Yes ↓

Does the noise come from the drum?

No →

1. Check the roller.
(Check the roller that supports the drum and rotates)

2. Check the drum.
(Check the crack of the drum welding part)

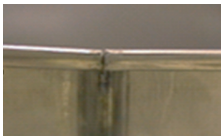

Yes ↓

Is there an abnormal noise in the motor part?

No →

1. Check the rotating part of the idler.
(Idler bracket bending, bracket screw)

2. Remove any alien particle on the wings of the fan.
(Noise can be generated from the unbalance of the fan due to alien particle on the fan. Check the tightened condition of the nut.)

Yes ↓

Is there an abnormal noise from the heater part?

No →

1. Noise from drum back and heater duct movement.
(Change the contacting part and check the screw fixation)
2. Vibration of heater heat wire.
(Check the fixation part of the heat wire)

Yes ↓

It is normal.

6-3. COMPONENT TESTING PROCEDURES

WARNING

To avoid risk of electrical shock, personal injury or death; disconnect power to dryer before servicing, unless testing requires power.

Component Electrical Testing (with ohmmeter)

- Thermistor resistance 10K Ω @ 25°C 77°F (2P-Blue & Red wire)
- Thermostat 1 resistance < 1Ω (White & Yellow wire)

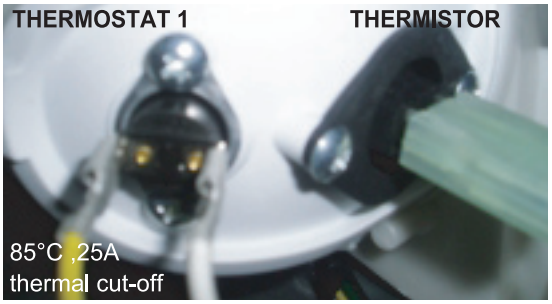

- Thermostat 3 resistance < 1Ω (Red & Black wire)
  -If resistance is infinity, replace thermostat 3.
- Thermostat 2 resistance < 1Ω (Blue & Black wire)
  -If resistance is infinity, replace thermostat 2.
- Heater resistance 10 Ω (Blue & Blue wire)
  -If resistance is infinity, replace Heater.

- Measure resistance of the following terminal
  1) Door switch knob: open
     Terminal : "COM" - "NC" (1-3) : ∞ Ω
     Terminal : "COM" - "NO" (1-2) < 1Ω

  2) Door switch push: On
     Terminal : "COM" - "NC" (1-3) : ∞ Ω
     Terminal : "COM" - "NO" (1-2) < 1Ω

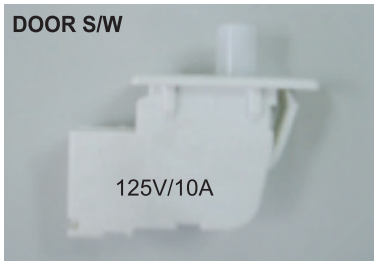

- Belt Cut-off S/W
  - Lever open: Resistance value < 1Ω
  - Lever push: Resistance value

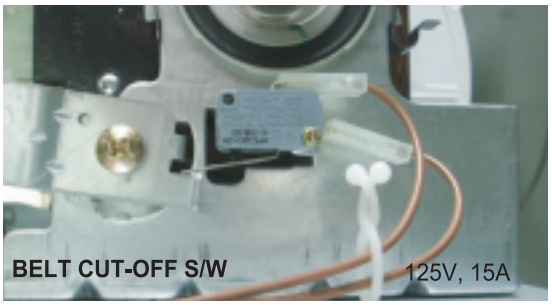

- Lamp resistance 80~100 Ω (Violet & gray)

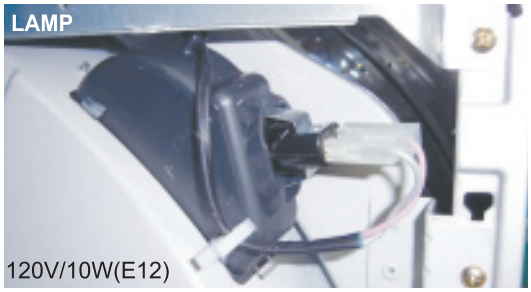

- Motor (Electronic & GAS)

Contacts

Function	1M	2M	3M	5M	6M
Start			●	●	
Run	●	●		●	●

●= Contact closed

Centrifugal Switch (Motor)

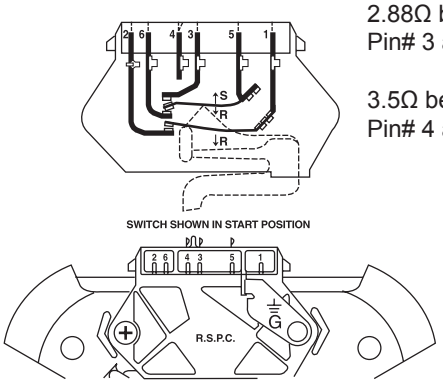

2.88Ω between Pin# 3 and 4

3.5Ω between Pin# 4 and 5

GAS MODEL

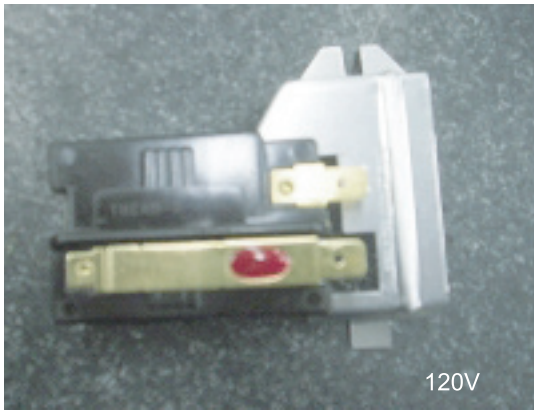

Radiant Sensor(10RS)
Resistance value < 1 Ω
If resistance is infinite, replace Radiant sensor

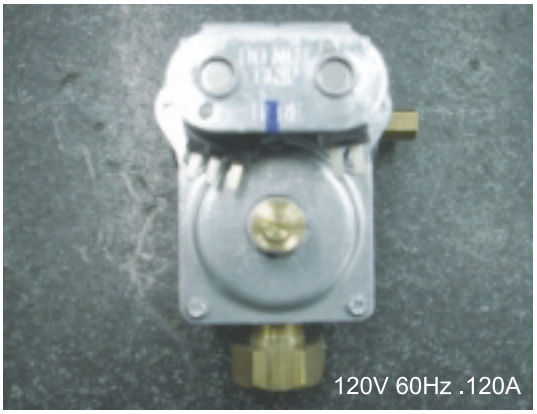

Gas Valve(25M01A)
Valve 1-2 : Resistance value 1.2K Ω
Valve 1-3 : Resistance value 0.5K Ω
Valve 4-5 : Resistance value 1.2K Ω
If resistance is infinity, replace Valve

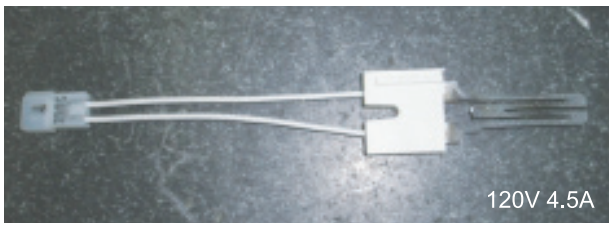

Igniter(101D)
Resistance value 40~400 Ω
If resistance is infinite, replace Igniter

Thermostat (60T21 Hi-Limit)230F-50F
Resistance value < 1 Ω
If resistance is infinity, replace Thermostat

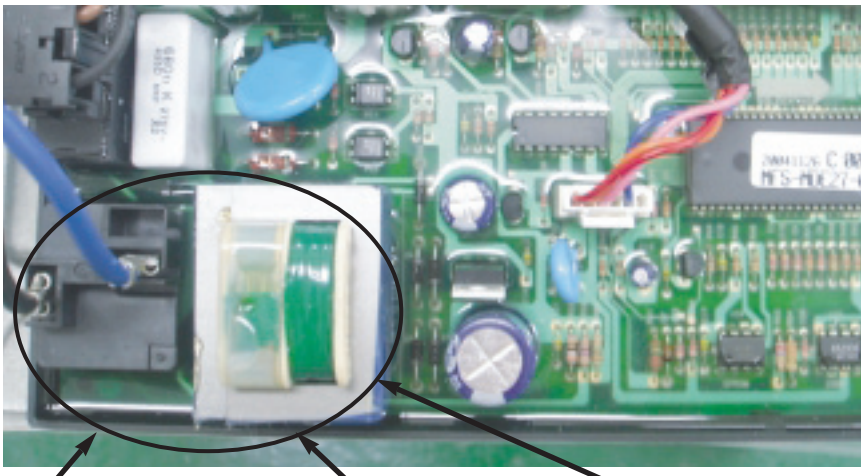

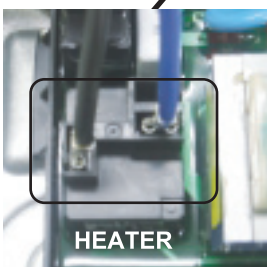

240VAC
Heater Input
Blue & Black wire on
Heater Relay

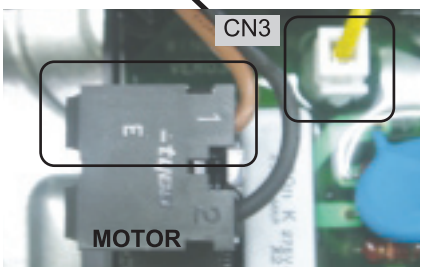

120VAC
Motor Input
Brown 1P on Motor relay
& Yellow wire

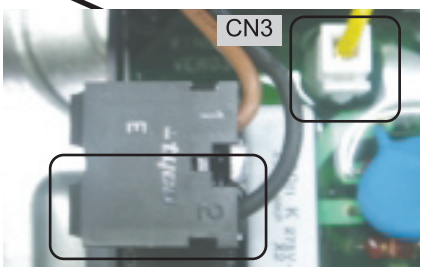

120VAC
PBA input
Black 2P-2 on Motor relay
& Yellow wire

Sensor Bars & temperature sensor check

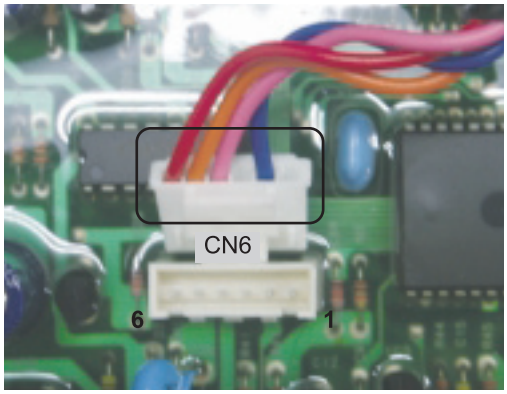

Sensor Bars – Disconnect harness and test Pink wire Pin 4 to Orange wire Pin 5.
Approx ∞ Ω **without laundry**
Approx 190Ω ± **10% with wet clothes**

Cycling Thermostat – Disconnect harness and test Blue wire Pin 2 to Red wire Pin 6.
Approx 10 KΩ **at 25 ° C/77 ° F**

7-1. ASSY-CONTROL

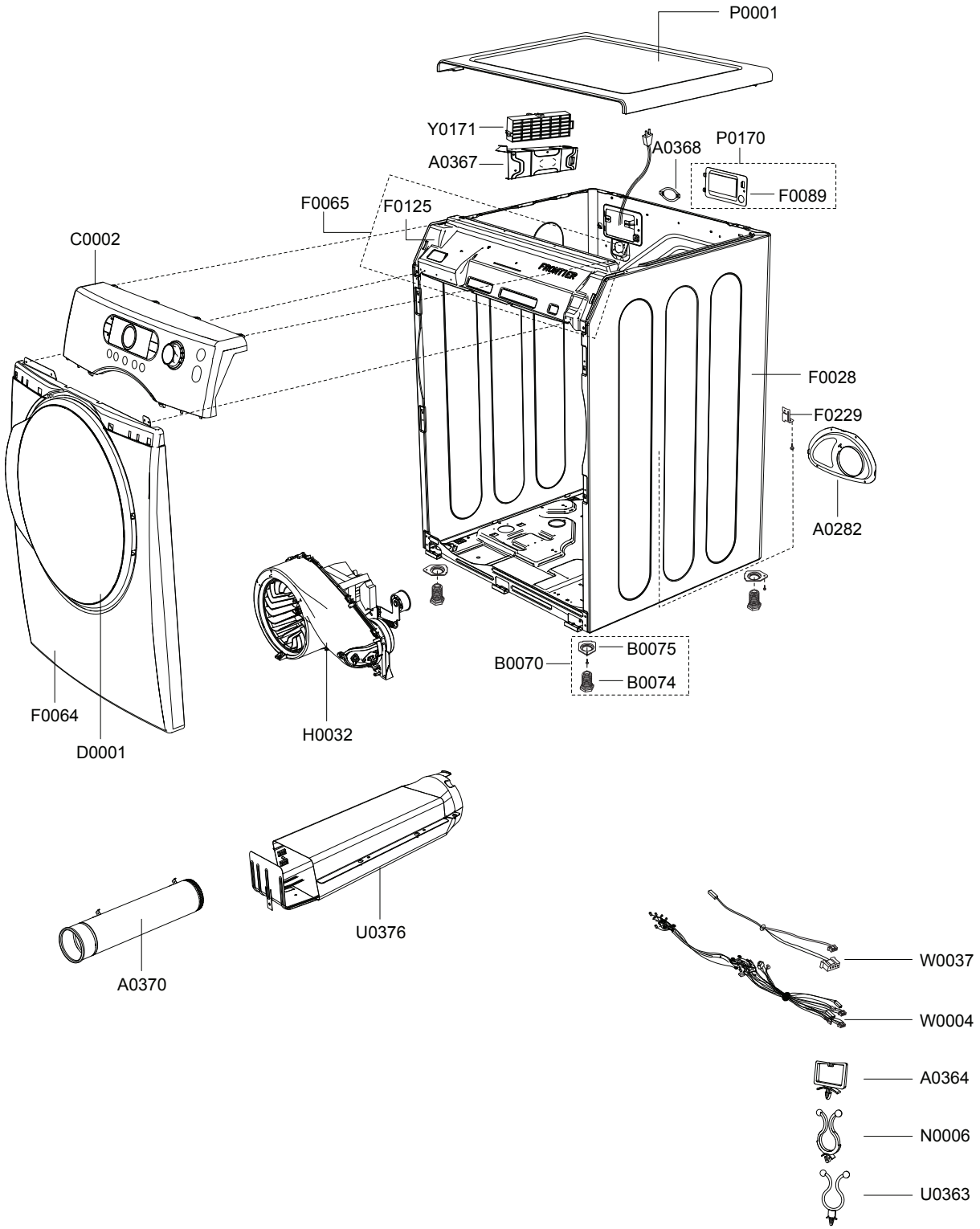

▶ MODEL CODE: DV328AEW/XAA

Service Bom (**SA**: SERVICE AVAILABLE, **SNA**: SERVICE NOT AVAILABLE)

Location.No	CODE-NO	DESCRIPTION	SPECIFICATION	Q'TY	Un	SA/SNA	Remark
A0282	DC63-00534C	COVER-BACK	WINGS-DRYER,PCM,0.8T(1.0T),-,	1	PC	SA	
A0364	DC61-60074A	CLAMPER-WIRE SADDLE	-,NYLON#66(DAWS-6NB)	1	PC	SA	
A0364	DC61-60074A	CLAMPER-WIRE SADDLE	-,NYLON#66(DAWS-6NB)	1	PC	SA	
A0364	DC61-60074A	CLAMPER-WIRE SADDLE	-,NYLON#66(DAWS-6NB)	1	PC	SA	
A0367	DC61-01229A	HOLDER-PCB	WINGS-DRYER,SGCC(GI),T0.8,-,-	1	PC	SA	
A0368	DC61-01428A	HOLDER-POWER	MDE9700AYW,PP,-,-,-,WHT,POW	1	PC	SA	
A0370	DC97-07519A	ASSY-DUCT EXHAUST	MDE9700AYW,DRYER	1	PC	SA	
B0070	DC97-12150A	ASSY-LEG	MARS-PJT,DRYER	4	PC	SA	
B0074	DC61-01693A	LEG	MARS-PJT,FRPP,-,-,-,-	1	PC	SNA	
B0075	DC61-01226A	BRACKET-LEG	WINGS-DRYER,SGCC(GI),T1.6,-,	1	PC	SA	
C0002	DC97-14387A	ASSY-PANEL CONTROL	DV328AEW/XAA,DRYER/WH	1	PC	SNA	
D0001	DC97-12626C	ASSY-DOOR	DV328AEW,DRYER/WHT	1	PC	SNA	
F0028	DC97-07516A	ASSY-FRAME	MDE7800AYW,MAYTAG/PREMIUM/WHT	1	PC	SA	
F0064	DC97-10353A	ASSY-FRAME FRONT	DV736E4/XAA,FRONTIER-DR	1	PC	SA	
F0065	DC97-10912A	ASSY-FRAME PLATE(U)	DV316LGW/XAA,FRONTIE	1	PC	SA	
F0089	DC63-00540A	COVER-POWER	WINGS-DRYER,SGCC(GI),T0.8,-,	1	PC	SA	
F0125	DC61-01525A	FRAME-PLATE(U)	DV316LEW/XAA,SGCC(GI),-,-	1	PC	SNA	
F0229	DC61-01233A	GUIDE-EXHAUST	27-DRYER,SGCC(GI),T0.8,-,-	1	PC	SA	
H0032	DC96-01112C	ASSY-MOTOR	MDE9700AYW,DRYER	1	PC	SA	
N0006	DC61-40081A	HOLDER-WIRE	DAWH-2NC,NYLON66,-,-,-,-,NTR	8	PC	SA	
N0006	DC61-40081A	HOLDER-WIRE	DAWH-2NC,NYLON66,-,-,-,-,NTR	1	PC	SA	
P0001	DC97-08634K	ASSY-COVER TOP	DV316LEW,T0.8/WHT	1	PC	SA	
P0170	DC97-08855A	ASSY-COVER POWER	MDE9700AYW,-	1	PC	SA	
U0363	6502-000127	CABLE CLAMP	DAWH-18NB,ID15,-,NYLON66,NTR	1	PC	SA	
U0376	DC97-08891A	ASSY-DUCT HEATER	MDE9700AYW,HEATER/5300W	1	PC	SA	
W0004	DC96-00764C	ASSY-M.WIRE HARNESS	MDE9700,LAMP/THERMAL	1	PC	SA	
W0037	DC96-00763A	ASSY-FLAT WIRE HARNESS	GR-PJT,FLAT WIRE	1	PC	SA	
Y0171	MFS-DV327L-00	ASSY-PCB PARTS(M)	FRONTIER2 DRYER MAIN	1	PC	SA	

7-2. ASSY-DRUM

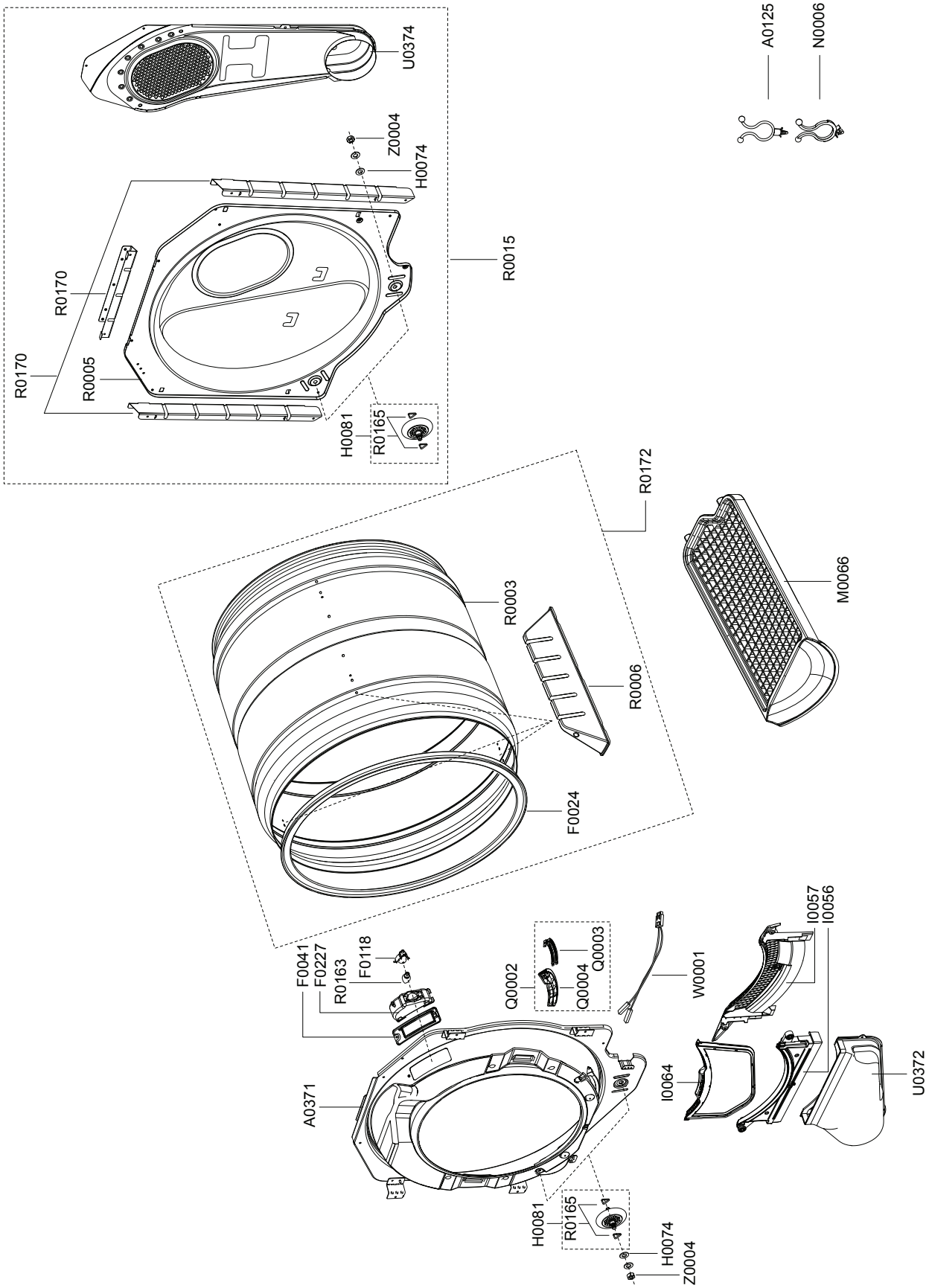
U0374
Z0004
H0074
R0015
R0170
R0170
R0005
H0081
R0165
A0125
N0006
R0172
R0003
R0006
F0024
M0066
F0041
F0227
R0163
F0118
Q0002
Q0003
Q0004
W0001
I0057
I0056
A0371
I0064
U0372
H0081
R0165
H0074
Z0004

▶ MODEL CODE: DV328AEW/XAA

Service Bom (**SA**: SERVICE AVAILABLE, **SNA**: SERVICE NOT AVAILABLE)

Location.No	CODE-NO	DESCRIPTION	SPECIFICATION	Q'TY	Un	SA/SNA	Remark
A0125	6046-000310	STAND OFF	ID11.5,L2,NTR,NYLON66,DAWH-3NA	3	PC	SA	
A0371	DC97-10362A	ASSY-S.DRUM FRONT	DV736E4/XAA,FRONTIER-D	1	PC	SA	
F0024	DC97-07618A	ASSY-GASKET PAD	MDE9700AYW,DRYER/DRUM-WR	2	PC	SNA	
F0041	DC63-00531A	COVER-LAMP	WINGS-DRYER,PC(LEXAN#141R),-,	1	PC	SA	
F0118	DC47-00021A	SOCKET-LAMP	-,MDE7800,E12,125V,0.6A,-,12	1	PC	SA	
F0227	DC61-01220A	GUIDE-LAMP	27-DRYER,FH44N,-,-,-,BLK,INTE	1	PC	SA	
H0074	DC60-60060A	WASHER	-,T2,-,ID12,OD24,-,YEL,-	4	PC	SA	
H0074	DC60-60060A	WASHER	-,T2,-,ID12,OD24,-,YEL,-	4	PC	SA	
H0081	DC97-07523B	ASSY-ROLLER	27-DRYER,DRYER/EPDM	2	PC	SA	
H0081	DC97-07523B	ASSY-ROLLER	27-DRYER,DRYER/EPDM	2	PC	SA	
I0056	DC63-00538A	COVER-FILTER(F)	WINGS-DRYER,TI-42,-,-,-,	1	PC	SA	
I0057	DC63-00675A	COVER-FILTER(B)	DV736E4/XAA,TI-42,-,-,-,	1	PC	SA	
I0064	DC61-01521A	CASE-FILTER	DV736E4/XAA(FRONTIER),FRPP(G	1	PC	SA	
M0066	DC61-01522A	DIE-RACK DRY	FRONTIER-DRYER,TB-53,-,-,NT	1	PC	SA	
N0006	DC61-40081A	HOLDER-WIRE	DAWH-2NC,NYLON66,-,-,-,-,NTR	1	PC	SA	
Q0002	DC97-08889A	ASSY-GUIDE SENSOR	MDE9700AYW,YOUCH SENSO	1	PC	SA	
Q0003	DC61-01231A	PLATE-SENSOR	27-DRYER,STS304,T0.8,-,-,-,	2	PC	SA	
Q0004	DC61-01235A	GUIDE-SENSOR	WINGS-DRYER,TI-42,-,-,-,GRY	1	PC	SA	
R0003	DC66-00397C	DRUM-WRAPPER	WINGS-DRYER(PREMIUM),STS430	1	PC	SNA	
R0005	DC66-00398C	DRUM-BACK	WINGS-DRYER,STS430M,-,-,-,HAIR	1	PC	SA	
R0006	DC66-00436A	DRUM-LIFTER	DV736E4/XAA,TI-42,-,-,-,GRY,	3	PC	SA	
R0015	DC97-07522C	ASSY-DRUM BACK	MDE9700AYW,STAINLESS	1	PC	SA	
R0163	4713-001199	LAMP-INCANDESCENT	120V,83mA,10W,NTR,-,-,	1	PC	SA	
R0165	DC61-01228A	HOLDER-SHAFT	WINGS-DRYER,NYLON#6,-,-,-,N	2	PC	SA	
R0165	DC61-01228A	HOLDER-SHAFT	WINGS-DRYER,NYLON#6,-,-,-,N	2	PC	SA	
R0170	DC61-01237A	BRACKET-DRUM BACK	WINGS-DRYER,SGCC(GI),T	1	PC	SA	
R0170	DC61-01238A	BRACKET-DRUM BACK	27-DRYER,SGCC(GI),T0.8	2	PC	SA	
R0172	DC97-10355B	ASSY-DRUM WRAPPER	DV316LGW/XAA,FRONTIER	1	PC	SA	
U0372	DC97-07526B	ASSY-DUCT OUTLET	DV337AEW,DRYER/BRACKET-	1	PC	SA	
U0374	DC97-07521A	ASSY-DUCT AIR	MDE7800AYW,DRYER/ELECTRIC	1	PC	SA	
W0001	DC96-00766A	ASSY-WIRE HARNESS	GR-PJT,SUB/TOUCH SENSO	1	PC	SA	
Z0004	DC60-50145A	NUT-HEX	-,MSWR10,-,-,-,-,-,-,M10	2	PC	SA	
Z0004	DC60-50145A	NUT-HEX	-,MSWR10,-,-,-,-,-,-,M10	2	PC	SA	

7-3. ASSY-FRONT

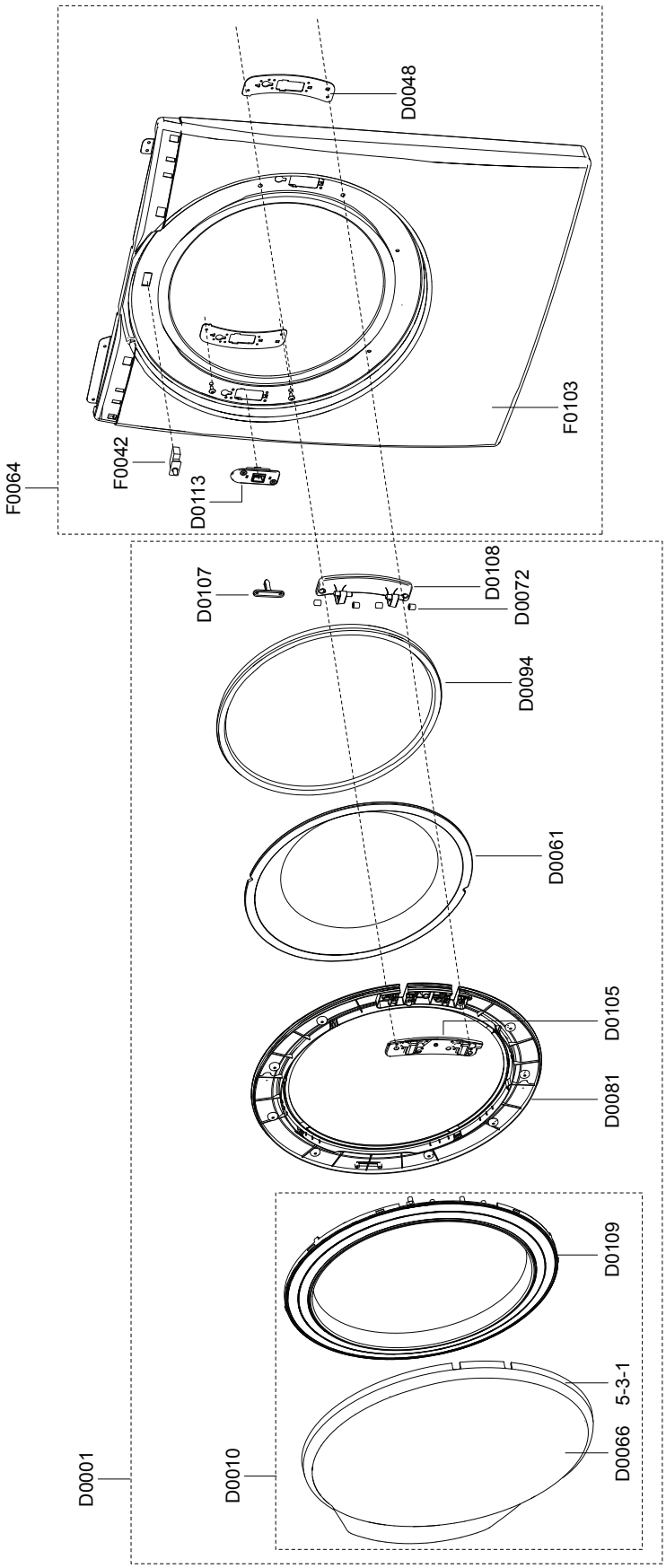

▶ MODEL CODE: DV328AEW/XAA

Service Bom (**SA**: SERVICE AVAILABLE, **SNA**: SERVICE NOT AVAILABLE)

Location.No	CODE-NO	DESCRIPTION	SPECIFICATION	Q'TY	Un	SA/SNA	Remark
D0001	DC97-12626C	ASSY-DOOR	DV328AEW,DRYER/WHT	1	PC	SNA	
D0010	DC97-12609E	ASSY-COVER DOOR	DV328AEW,DRYER/WHT	1	PC	SNA	
D0048	DC61-01222A	BRACKET-HINGE	27-DRYER,HGI,T2.0,-,-,-,-	2	PC	SA	
D0061	DC64-00993A	DOOR-GLASS	WINGS-DRYER,GLASS,T5,-,-,-,TR	1	PC	SA	
D0066	DC64-01354A	DOOR-SAFETY	WF337AAW,PET,T2.5,-,-,-,SILK	1	PC	SNA	
D0072	DC61-00891A	GUIDE-HINGE	HAUZEN(DOM),POM,-,-,-,WHT,HI	4	PC	SA	
D0081	DC61-01523A	HOLDER-GLASS	DV316LEW/XAA,TB-53,-,-,-,GR	1	PC	SA	
D0094	DC62-00198B	SEAL-DOOR	WINGS-DRYER,SILICON,GRY,-,-,-,	1	PC	SA	
D0105	DC61-01576A	SUPPORT-HINGE	FRONTIER-PJT,STS430,T1.2,-	1	PC	SA	
D0107	DC66-00395A	LEVER-DOOR	WINGS-DRYER,POM,-,-,-,-,NTR,-	1	PC	SA	
D0108	DC61-01532A	HINGE-DOOR	WF326LAW,ZNDC,T3.8,-,-,-,-,FR	1	PC	SA	
D0109	DC63-00789A	COVER-DOOR(I)	WF337AAW,ABS,-,-,-,-,-,FT2	1	PC	SA	
D0113	DC97-07510B	ASSY-HOLDER LEVER	MDE7800AYW,DRYER/DOOR	1	PC	SA	
F0042	DC64-00828A	DOOR-S/W	GD-PJT,PA,T13.6,H38.5,W44.3,-,	1	PC	SA	
F0064	DC97-10353A	ASSY-FRAME FRONT	DV736E4/XAA,FRONTIER-DR	1	PC	SA	
F0103	DC61-01524A	FRAME-FRONT	DV736E4/XAA,SECC(EGI),-,-,WH	1	PC	SNA	
5-3-1	DC63-00773C	COVER-DOOR(O)	DV328AEW,ABS,-,-,-,-,-,WHT	1	PC	SNA	

7-4. ASSY-PANEL CONTROL

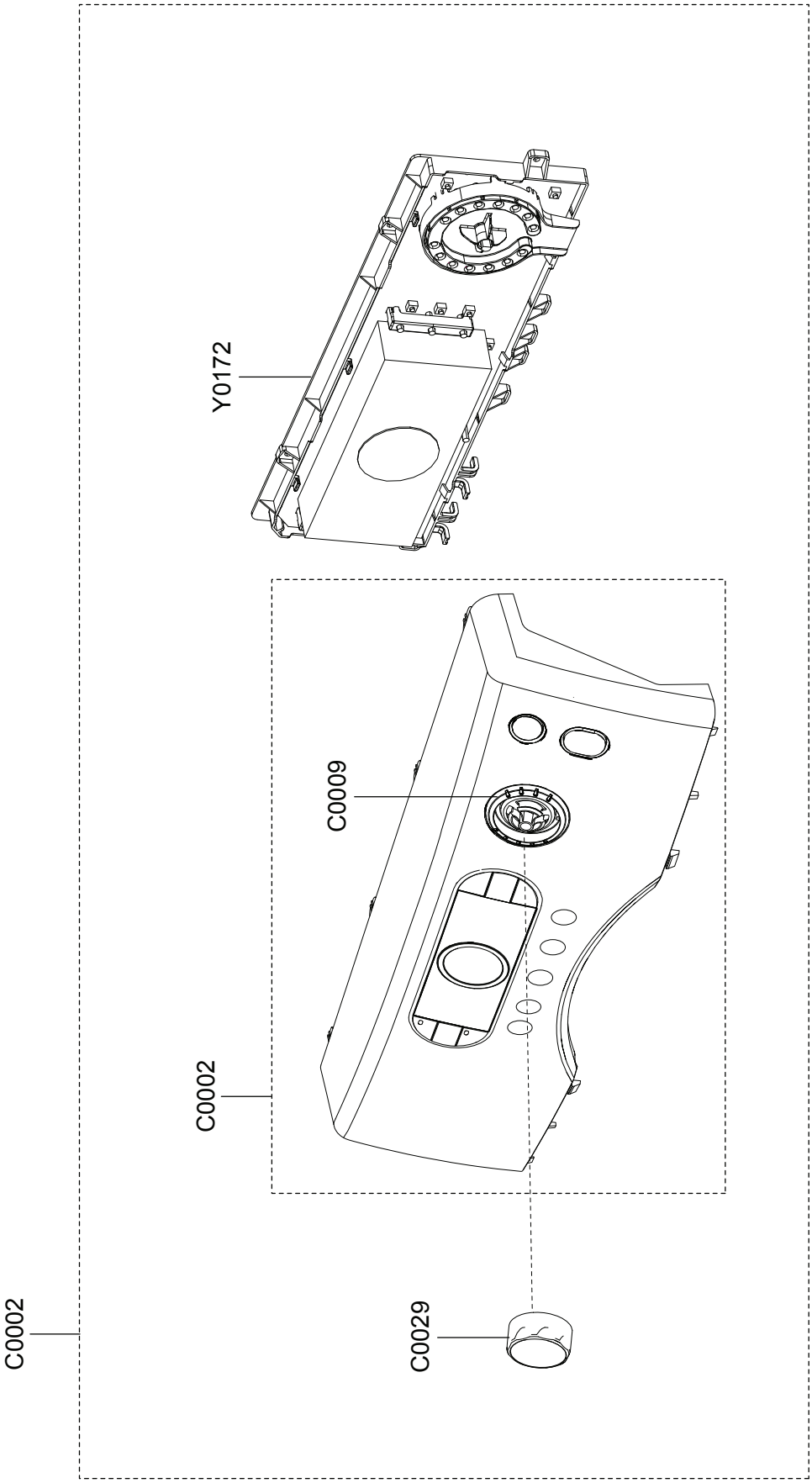

▶ MODEL CODE: DV328AEW/XAA

Service Bom (**SA**: SERVICE AVAILABLE, **SNA**: SERVICE NOT AVAILABLE)

Location.No	CODE-NO	DESCRIPTION	SPECIFICATION	Q'TY	Un	SA/SNA	Remark
C0002	DC97-12627J	ASSY-S.PANEL CONTROL	DV328AEW/XAA,FRONTI	1	PC	SA	
C0002	DC97-14387A	ASSY-PANEL CONTROL	DV328AEW/XAA,DRYER/WH	1	PC	SNA	
C0009	DC64-01491A	WINDOW-ENCODER(O)	DV337AEW/XAA,ABS,-,-,-	1	PC	SA	
C0029	DC97-12954C	ASSY-KNOB ENCODER	WF337AAW/XAA,NEW	1	PC	SA	
Y0172	MFS-DV318A-S0	ASSY-PCB PARTS(S)	FRONTIER3 DRYER SUB	1	PC	SA	

7-5. ASSY-MOTOR / ASSY-DUCT HEATER

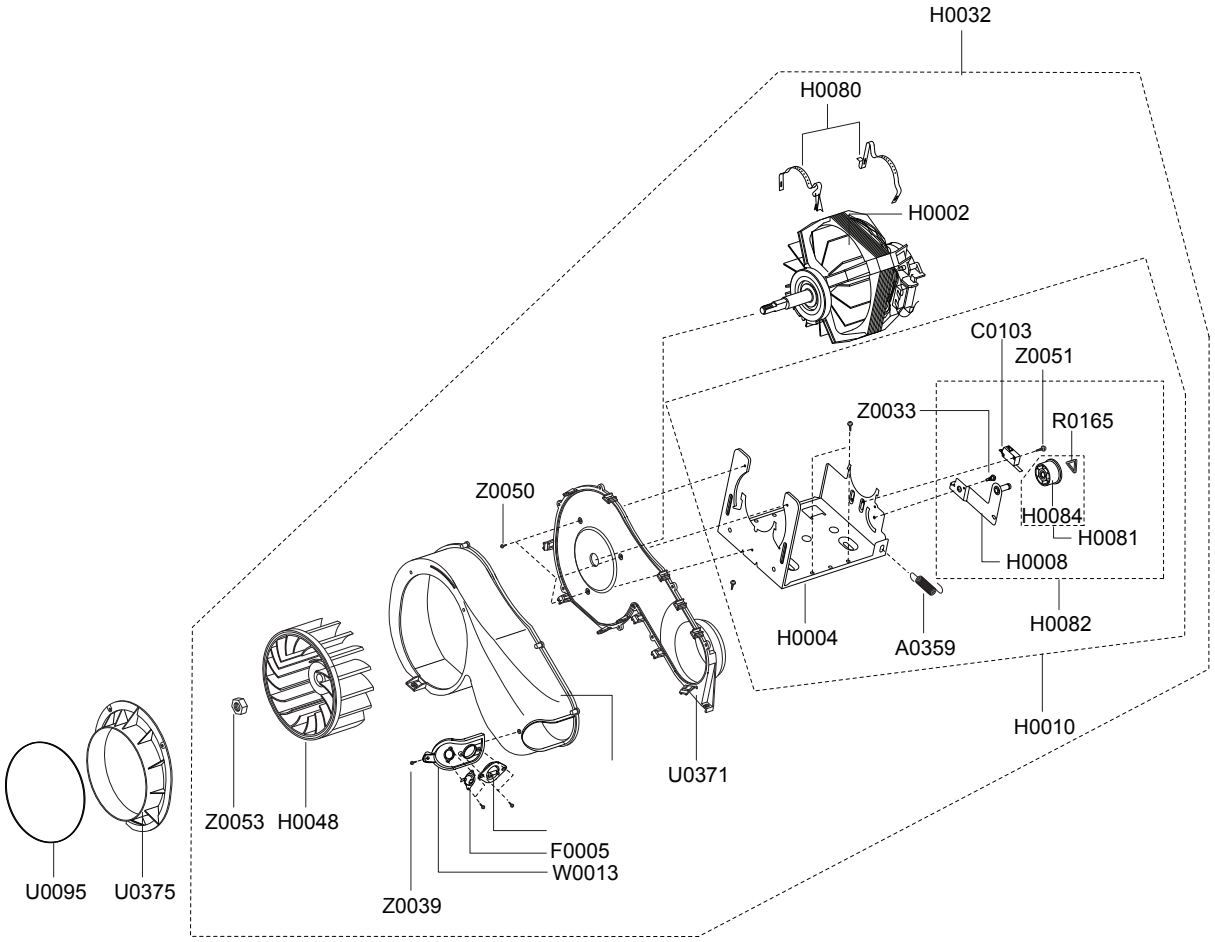

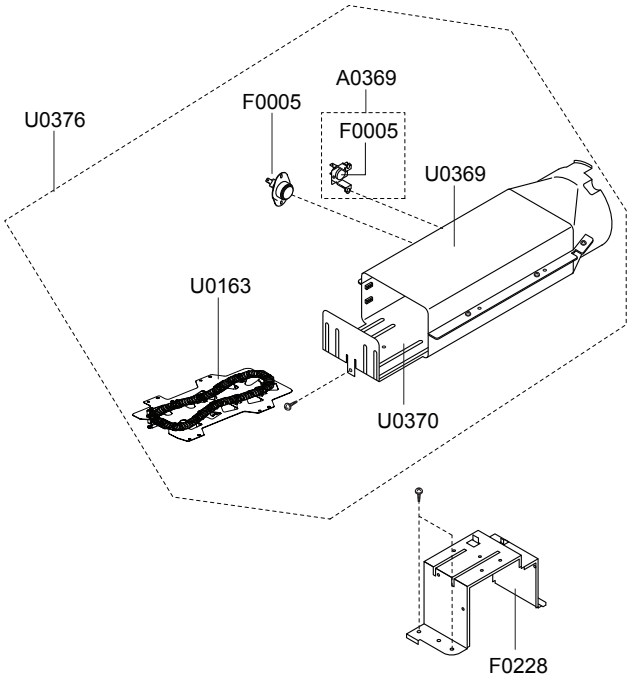

▶ MODEL CODE: DV328AEW/XAA

Service Bom (**SA**: SERVICE AVAILABLE, **SNA**: SERVICE NOT AVAILABLE)

Location.No	CODE-NO	DESCRIPTION	SPECIFICATION	Q'TY	Un	SA/SNA	Remark
A0359	DC61-01215B	SPRING ETC-TENSION	MDE9700AYW,HSWR,D1.8,	1	PC	SA	
A0369	DC96-00887A	ASSY-BRACKET THERMOSTAT	MDE9700AYW,DRYER	1	PC	SA	
C0103	3405-001077	SWITCH-MICRO	125V,15A,180gf,2	1	PC	SA	
F0005	DC47-00016A	THERMOSTAT	B-2,-,250V,25A,-20~150,-40~15	1	PC	SA	
F0005	DC47-00018A	THERMOSTAT	60T11,-,250V,25A,-20~150,-30~	1	PC	SA	
F0005	DC47-00015A	THERMOSTAT	B-2,-,250V,25A,-20~150,-40~15	1	PC	SA	
F0228	DC61-01224A	DIE-HEATER	27-DRYER,SECC(EGI),-,-,NTR,T1	1	PC	SA	
H0002	DC31-00055A	MOTOR INDUCTION-DRYER	WINGS-PJT,S58NXDD-	1	PC	SA	
H0004	DC61-01213A	BRACKET-MOTOR	WINGS-DRYER,HGI,T2.0,-,-,-	1	PC	SA	
H0008	DC61-01230B	BRACKET-IDLER	MDE9700AYW,HGI,T2.0,-,-,-,	1	PC	SA	
H0010	DC96-00790C	ASSY-BRACKET MOTOR	MDE9700AYW,DRYER	1	PC	SA	
H0013	DC63-00536A	COVER-DUCT FAN	27-DRYER,TB-53,-,-,-,-,-,	1	PC	SA	
H0032	DC96-01112C	ASSY-MOTOR	MDE9700AYW,DRYER	1	PC	SA	
H0048	DC67-00180A	FAN	WINGS-DRYER,FRPP(15%),-,-,-,MO	1	PC	SA	
H0080	DC61-01214A	SPRING-PLATE	WINGS-DRYER,SK-5,-,-,-,-,-,	2	PC	SA	
H0081	DC97-07509B	ASSY-ROLLER	MDE9700AYW,DRYER/MOTOR/IDLER	1	PC	SA	
H0082	DC96-00882C	ASSY-BRACKET IDLER	MDE9700AYW,DRYER	1	PC	SA	
H0084	DC66-00402A	ROLLER-IDLER	WINGS-DRYER,POM,-,-,-,-,MOT	1	PC	SA	
R0165	DC61-01228A	HOLDER-SHAFT	WINGS-DRYER,NYLON#6,-,-,-,N	1	PC	SA	
U0095	6602-001314	BELT-TIMING GEAR	0724,RUBBER(GOODYEAR),T	1	PC	SA	
U0163	DC47-00019A	HEATER-DRY	-,GD-PJT,-,5300W,21A,240,10,D	1	PC	SA	
U0369	DC67-00132A	DUCT-HEATER(U)	WINGS-DRYER,AL-COAT,T0.5,	1	PC	SA	
U0370	DC67-00133A	DUCT-HEATER(L)	WINGS-DRYER,AL-COAT,T0.5,	1	PC	SA	
U0371	DC61-01241A	GUIDE-DUCT FAN	27-DRYER,TB-53,-,-,-,NATU	1	PC	SA	
U0375	DC97-07895A	ASSY-DUCT CONNECTOR	MDE7800AYW,DRYER/ELE	1	PC	SA	
U0376	DC97-08891A	ASSY-DUCT HEATER	MDE9700AYW,HEATER/5300W	1	PC	SA	
W0013	DC61-01240A	BRACKET-THERMISTOR	27-DRYER,FN44N,-,-,-,	1	PC	SA	
W0035	DC32-00007A	THERMISTOR	N3S1-K41-S1,10K,10KOHM 25,-40	1	PC	SA	
Z0033	6009-001342	SCREW-SPECIAL	TH,+,-,M5,L11,ZPC(WHT),SWR	1	PC	SA	
Z0039	6002-000470	SCREW-TAPPING	TH,+,-,1,M4,L10,ZPC(WHT),S	5	PC	SC	
Z0050	6002-000231	SCREW-TAPPING	TH,+,-,2S,M4,L12,ZPC(WHT),	3	PC	SA	
Z0051	6002-000488	SCREW-TAPPING	PH,+,-,2S,M3,L16,ZPC(WHT),	1	PC	SA	
Z0053	6021-001201	NUT-INCH	LEFT TURN,3/8"-24,ZPC(YEL),MSW	1	PC	SA	

8. BLOCK DIAGRAM

8-1. BLOCK DIAGRAM

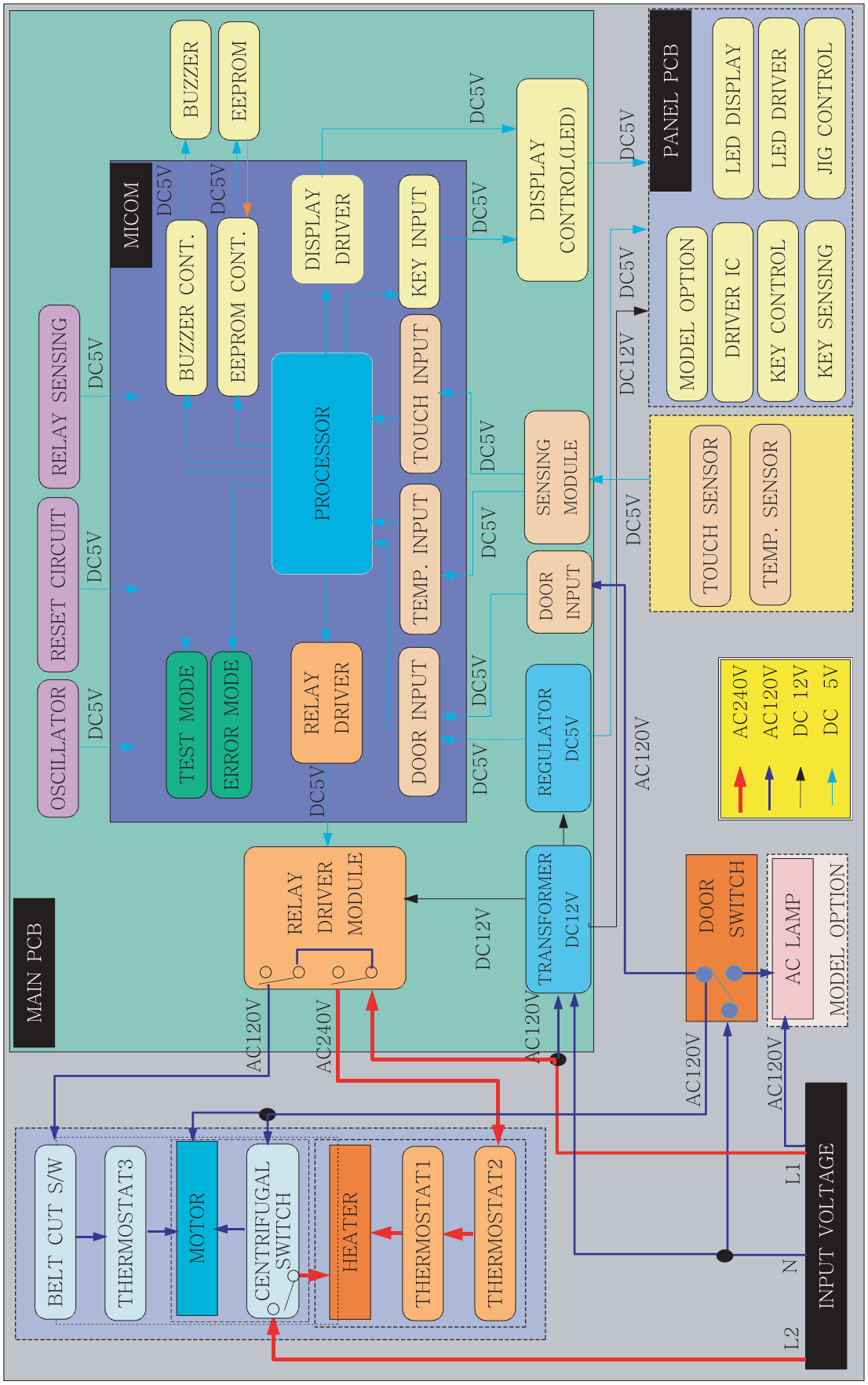

9. WIRING DIAGRAM

9-1. ELECTRIC DRYER WIRING DIAGRAM

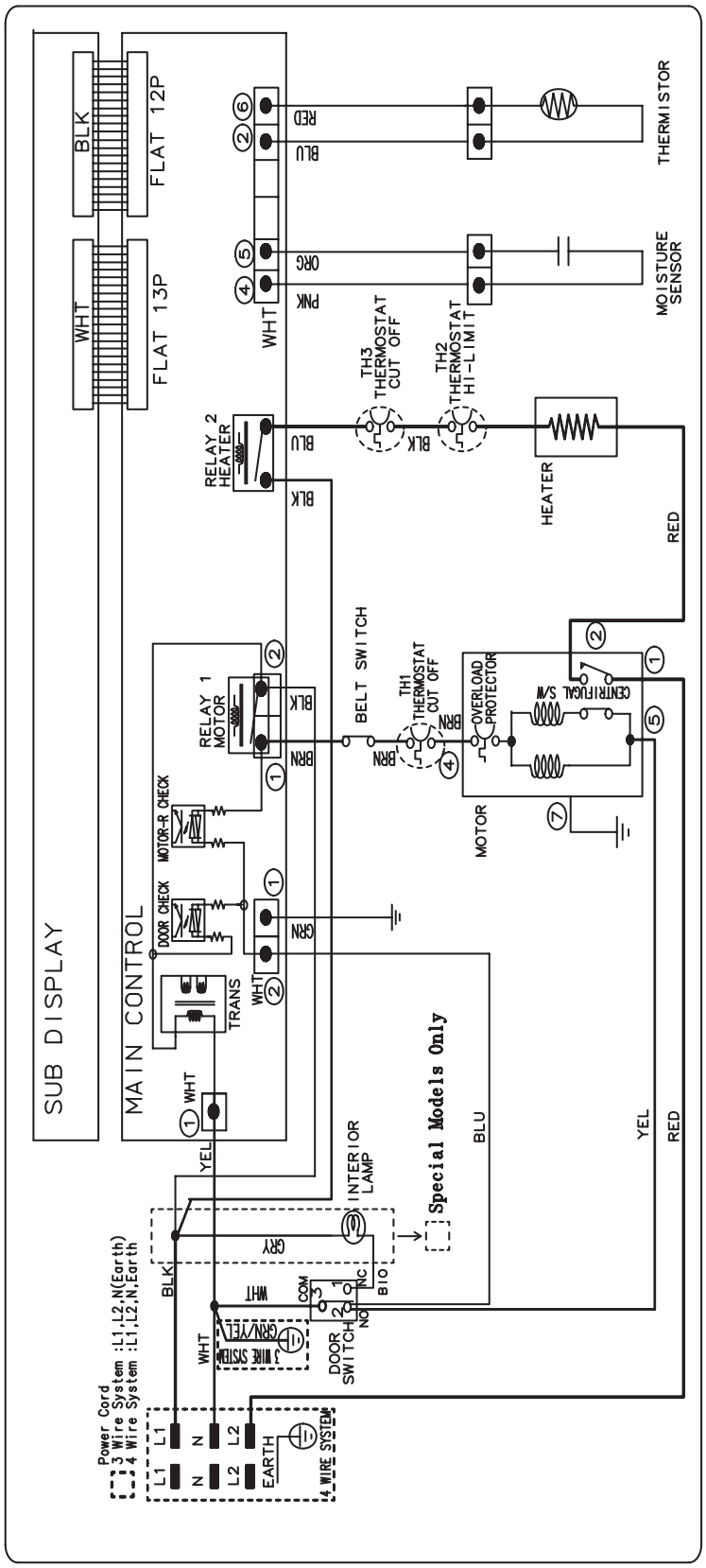

9-2. GAS DRYER WIRING DIAGRAM

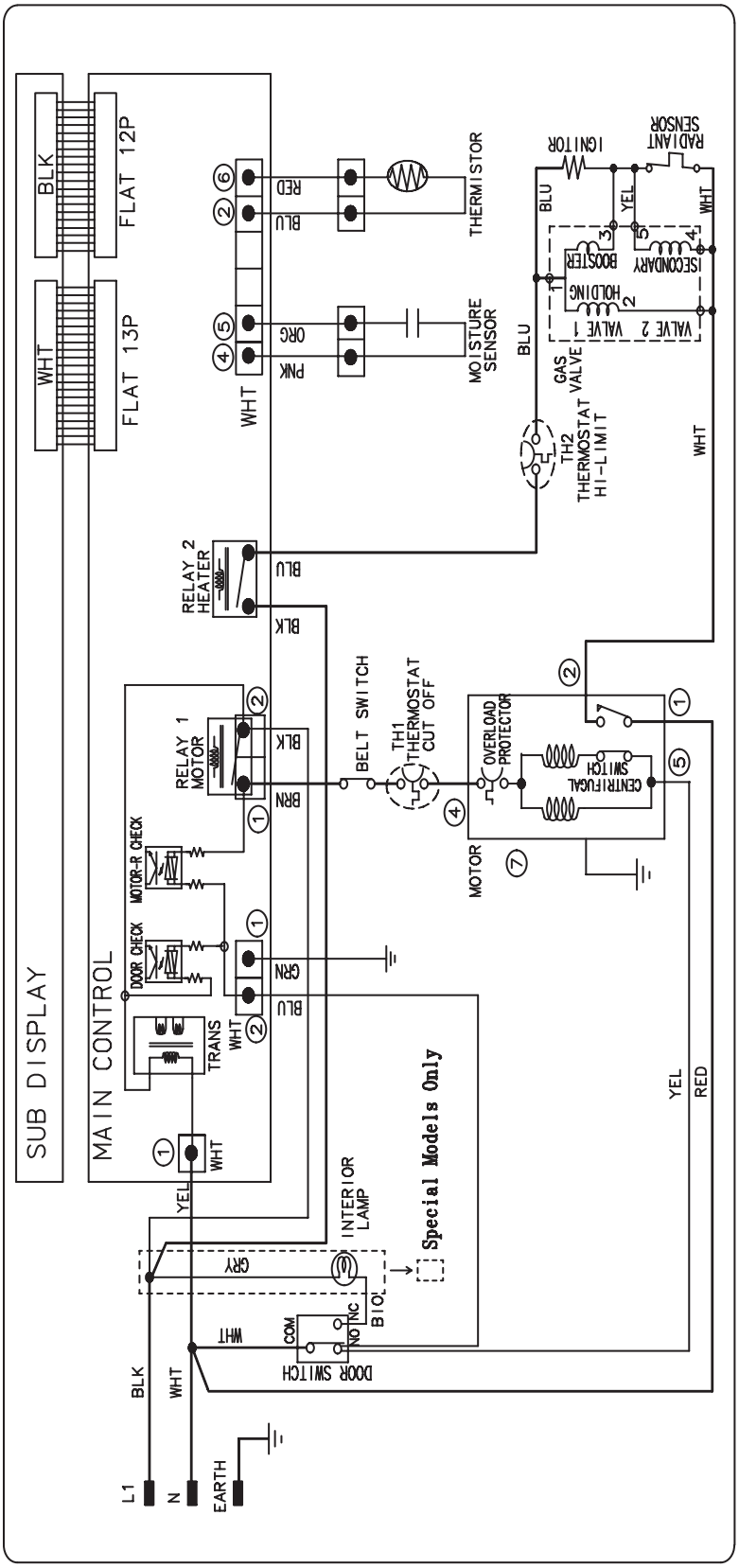

9-3. REFERENCE INFORMATION

BLK	BLACK
BLU	BLUE
GRN	GREEN
GRY	GRAY
NTR	NEUTRAL
ORG	ORANGE
PNK	PINK
RED	RED
SKYBLU	SKYBLUE
VIO	VIOLET
WHT	WHITE
YEL	YELLOW
N.F (Noise Filter)	
SENSOR PRESSURE	
SILVER NANO	
DRY CONDENSOR	
DRY MOTOR	
THERMOSTAT	
DOOR LOCK	
DOOR OPEN	
DOOR S/W	
HOT VALVE	
MAIN VALVE	
PRE VALVE	
DRY VALVE	
DRAIN MOTOR	
WATER HEATER	
STEAM HEATER	
DRY HEATER	
SPLICE	

10. PCB DIAGRAM

10-1 Main PBA Layout (The Principle Part)

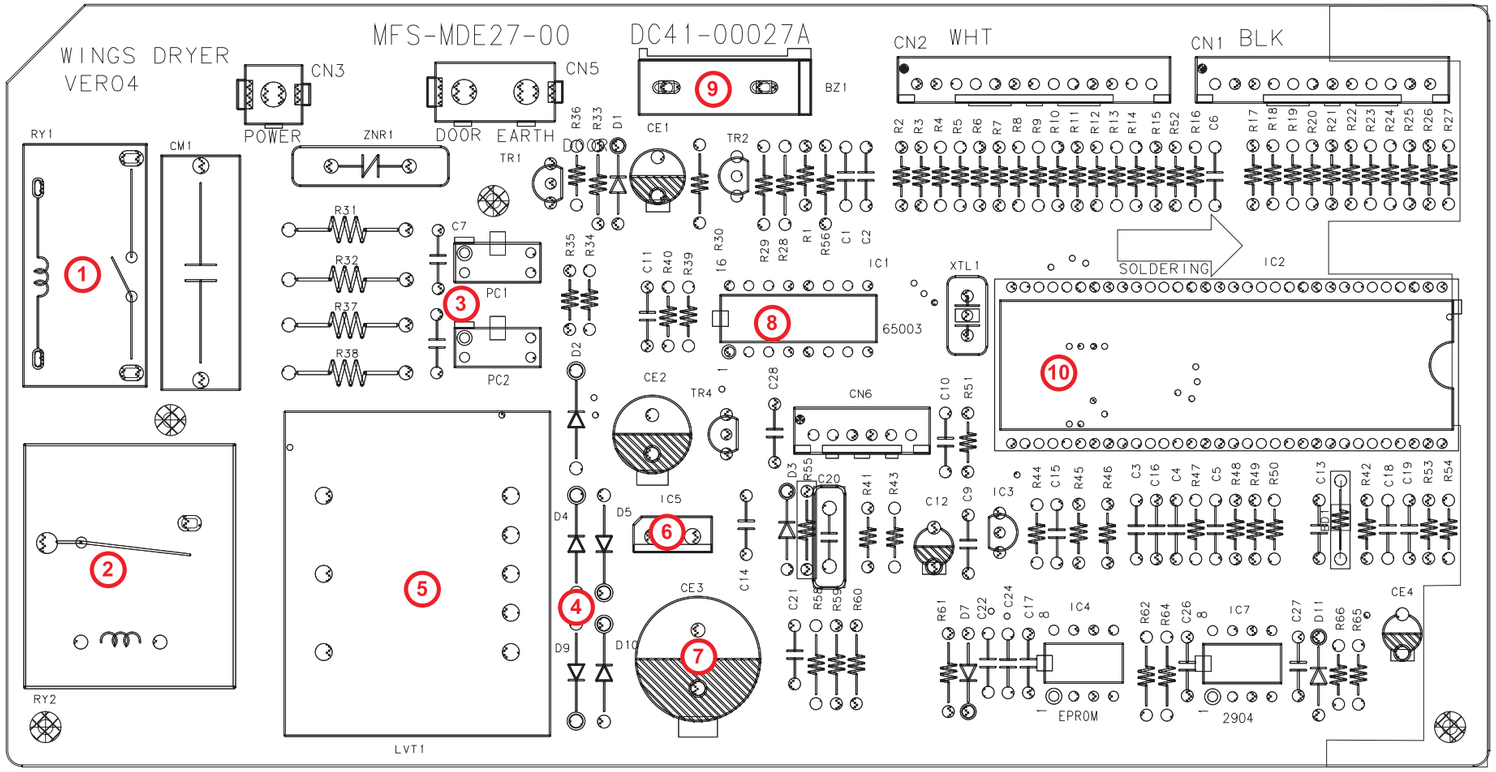

Item	Part No.	Description
1	Ry1	Motor Relay
2	Ry2	Heater Relay
3	PC1~2	✓ Check for the Frequency ✓ Make the Zerocross ✓ Door Lock Check
4	BD1	It Work to Change the AC to the DC
5	IC9	Drop the Voltage
6	IC1	Regulation for the 5V

Item	Part No.	Description
7	CE3	Charge the DC LINK (300V)
8	IC1	✓ Drive the Relay ✓ Supply the Current to the Acting Current
9	BZ1	Making a Sound
10	Micom	Control the Washing Machine

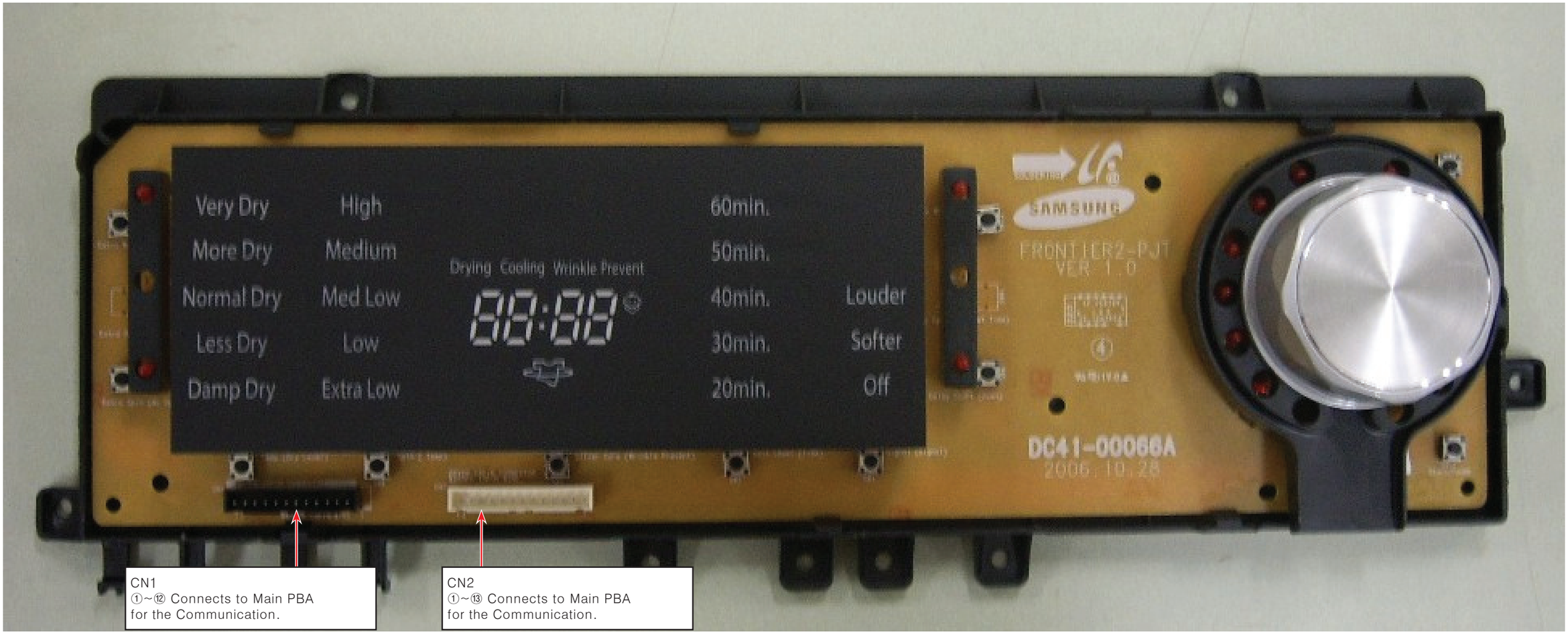
Very Dry
More Dry
Normal Dry
Less Dry
Damp Dry
High
Medium
Med Low
Low
Extra Low
Drying Cooling Wrinkle Prevent
60min.
50min.
40min.
30min.
20min.
Louder
Softer
Off
SAMSUNG
FRONTIER2-PJT
VER 1.0
DC41-00066A
2006.10.28
CN1
①~⑫ Connects to Main PBA
for the Communication.
CN2
①~⑬ Connects to Main PBA
for the Communication.

10-3 Sub PBA Layout (The Principle Part)

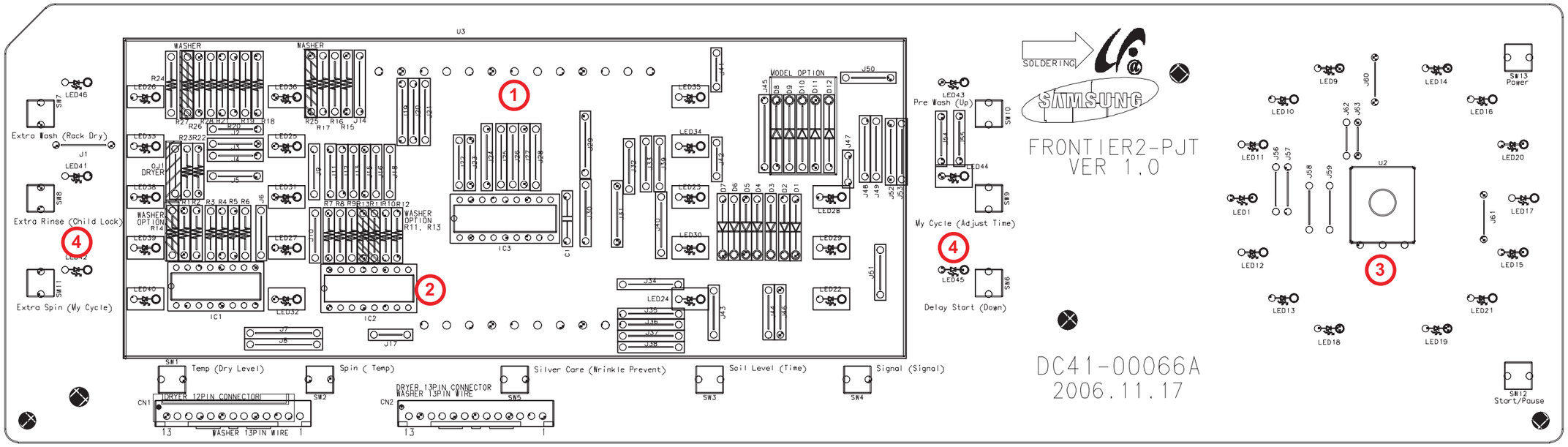

Item	Part No.	Description
1	U3	Display the Course
2	IC1~3	✓ Drive the LED & Display ✓ Supply the Current to the Acting Current
3	U2	✓ Rotary Switch (For the Selecting a Course)
4	LED & Key	✓ Input the Detail Course ✓ Display the Resent Course

11. SCHEMATIC DIAGRAMS

* This Document can not be used without Samsung's authorization.

11-1 MAIN PCB

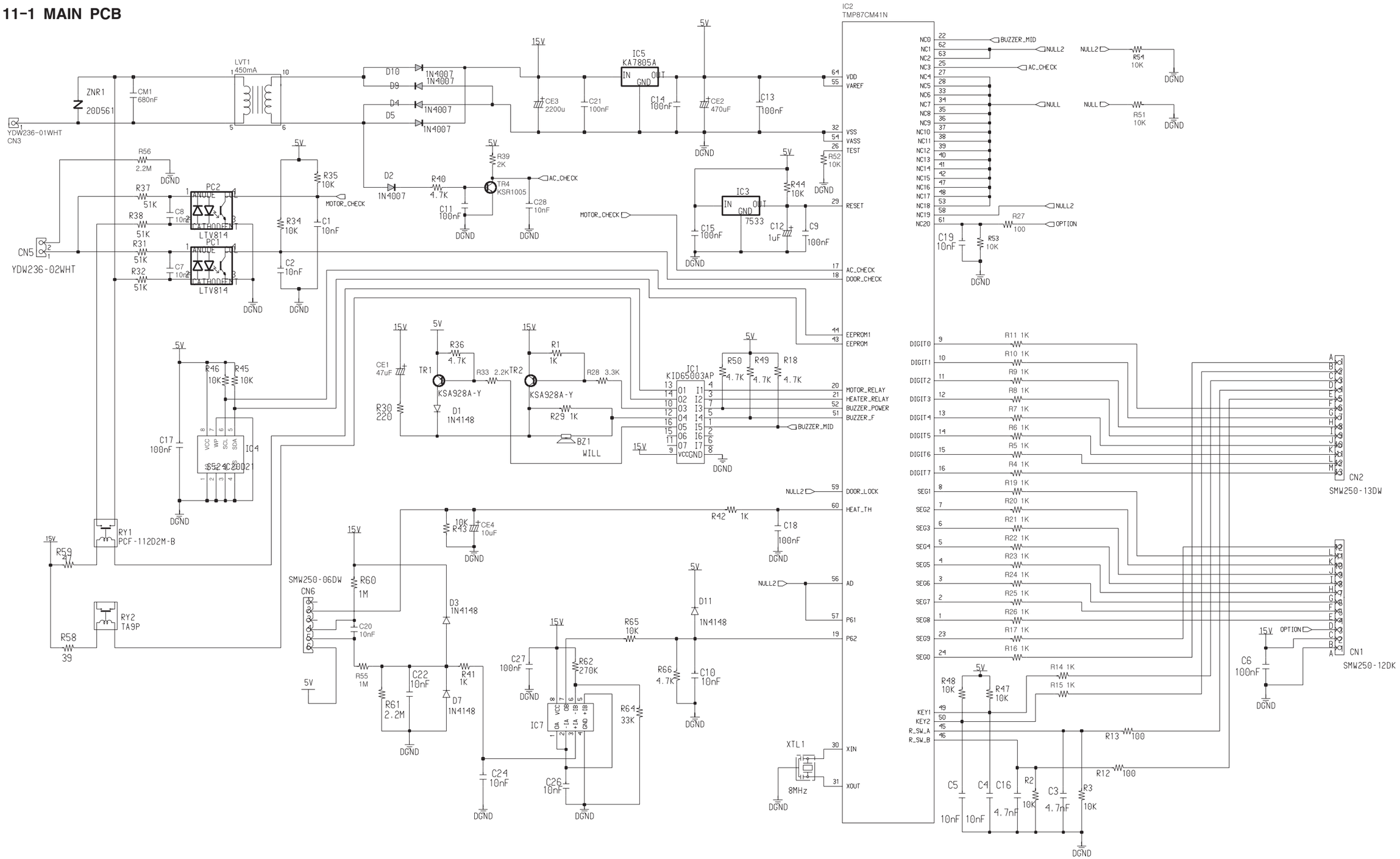

* This Document can not be used without Samsung's authorization.

11-2 SUB PCB

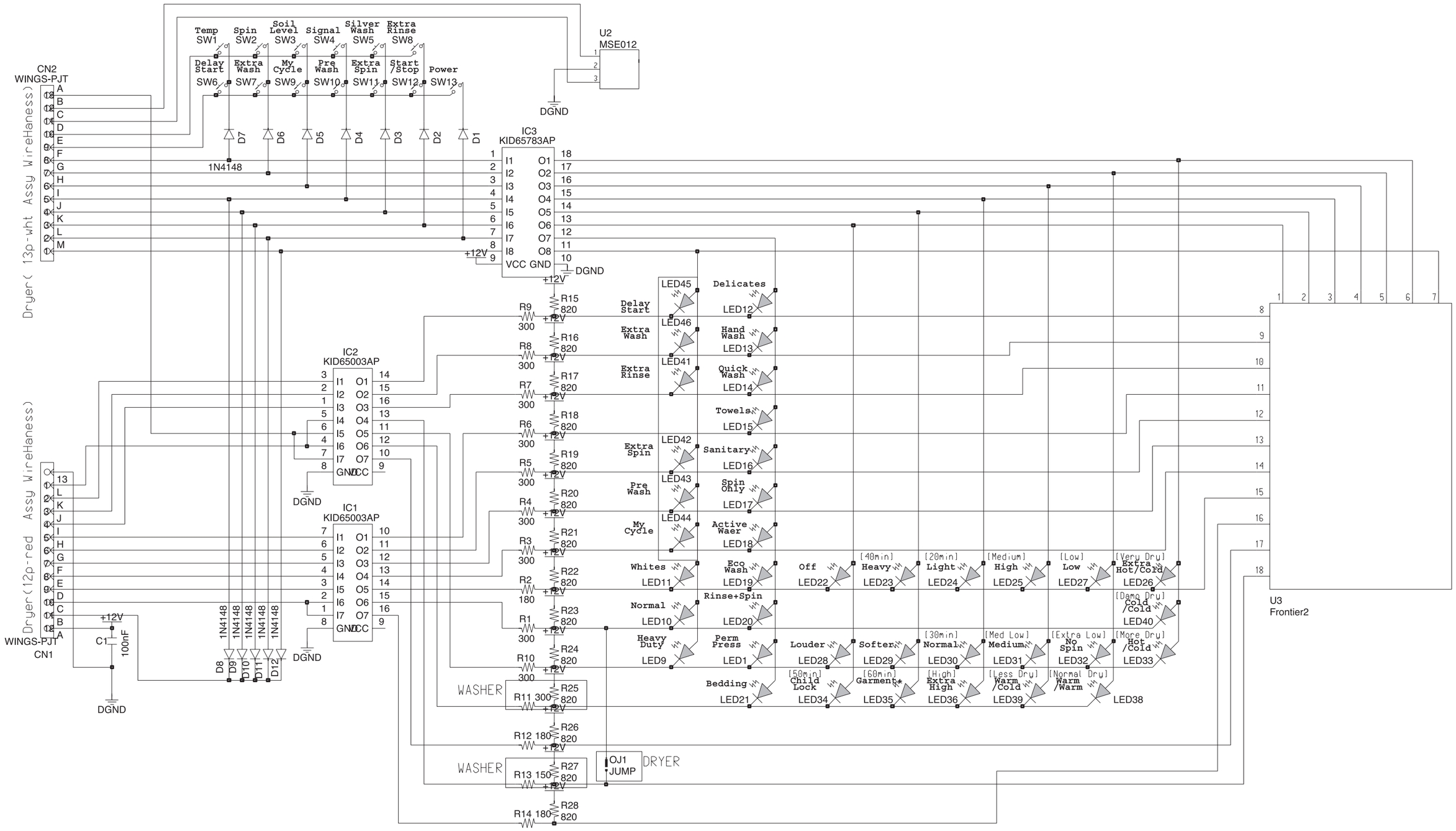

12. CIRCUIT DESCRIPTIONS

12-1. OVERALL SYSTEM DIAGRAM

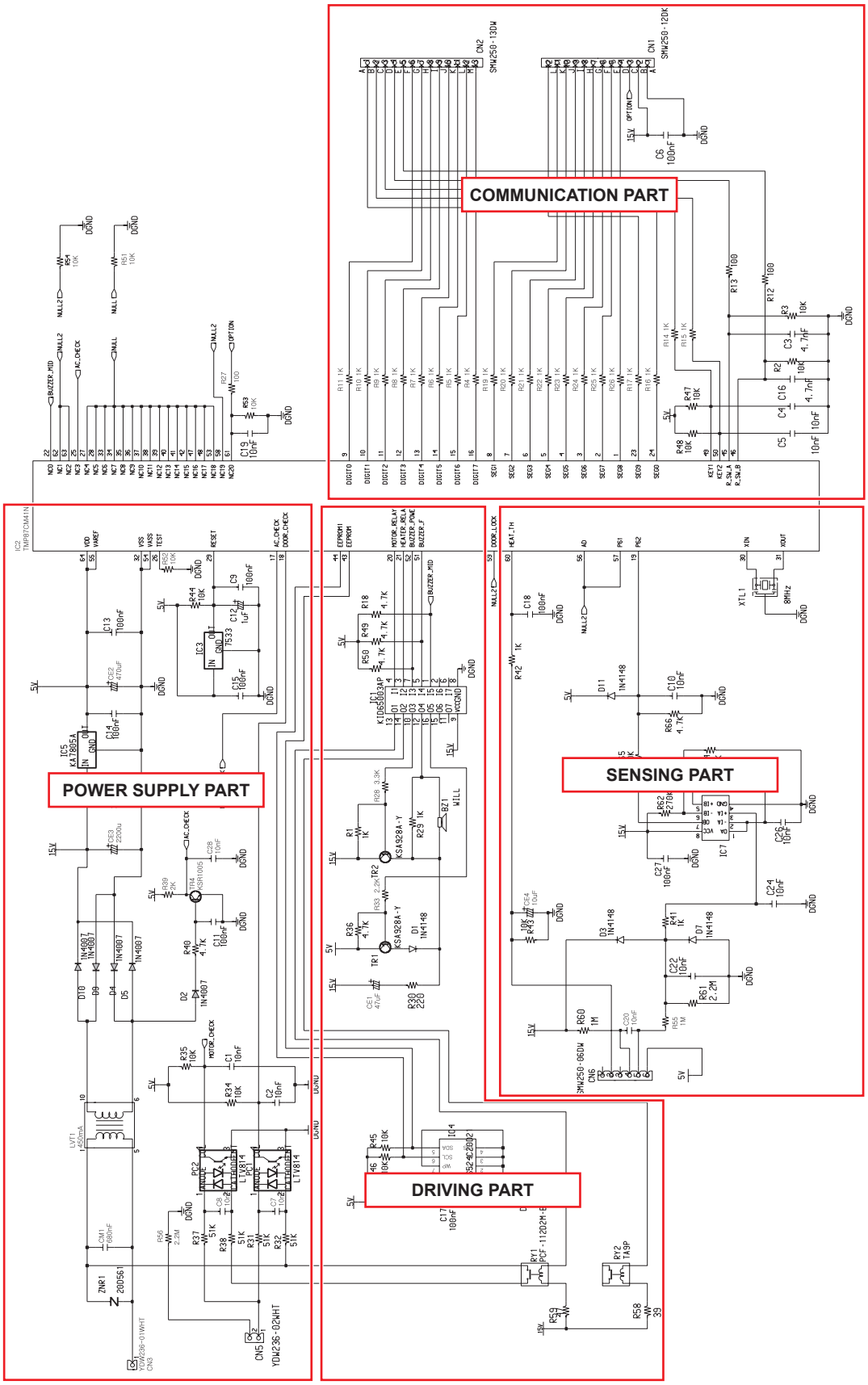

12-2. POWER SUPPLY PART

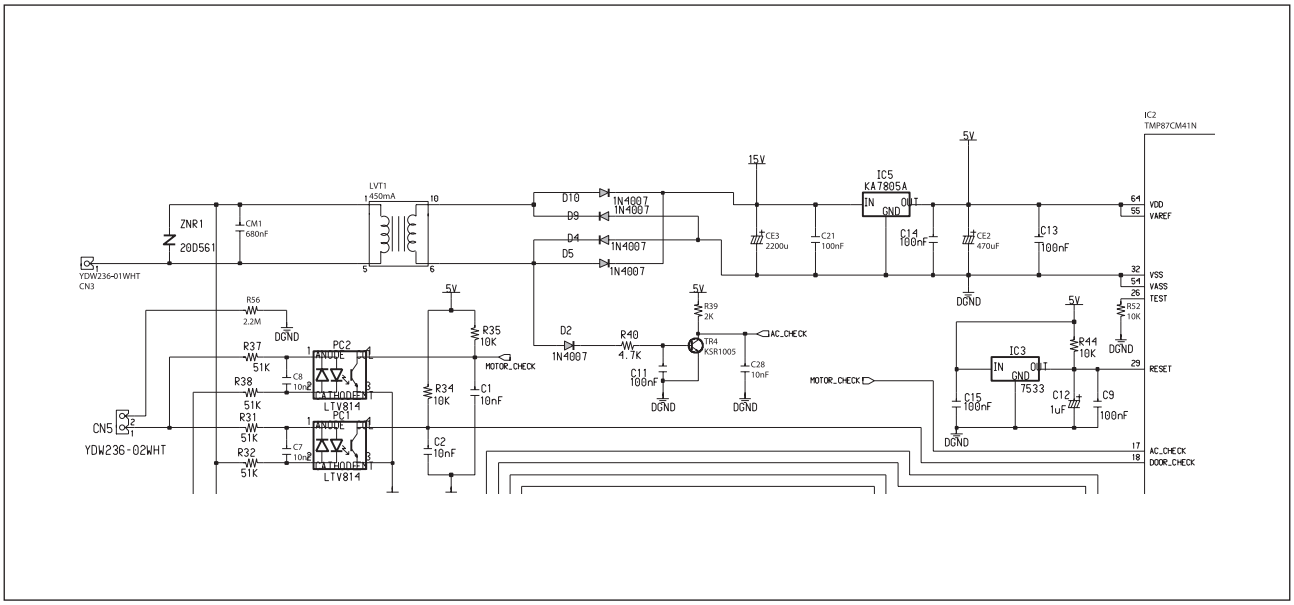

► FUNCTION

- 15V DC is generated by 16V AC reduced from LVT1 through Bridge Diode.
- The 5V DC is supplied to Micom through IC5.

► DESCRIPTION

- DC Voltage is generated by AC input through Bridge Diode.
- The AC input is Checked by TR2.
- A constant 5V is output at the IC5 output terminal.
- The door and motor are Checked by PC1, PC2

12-3. DRIVING PART

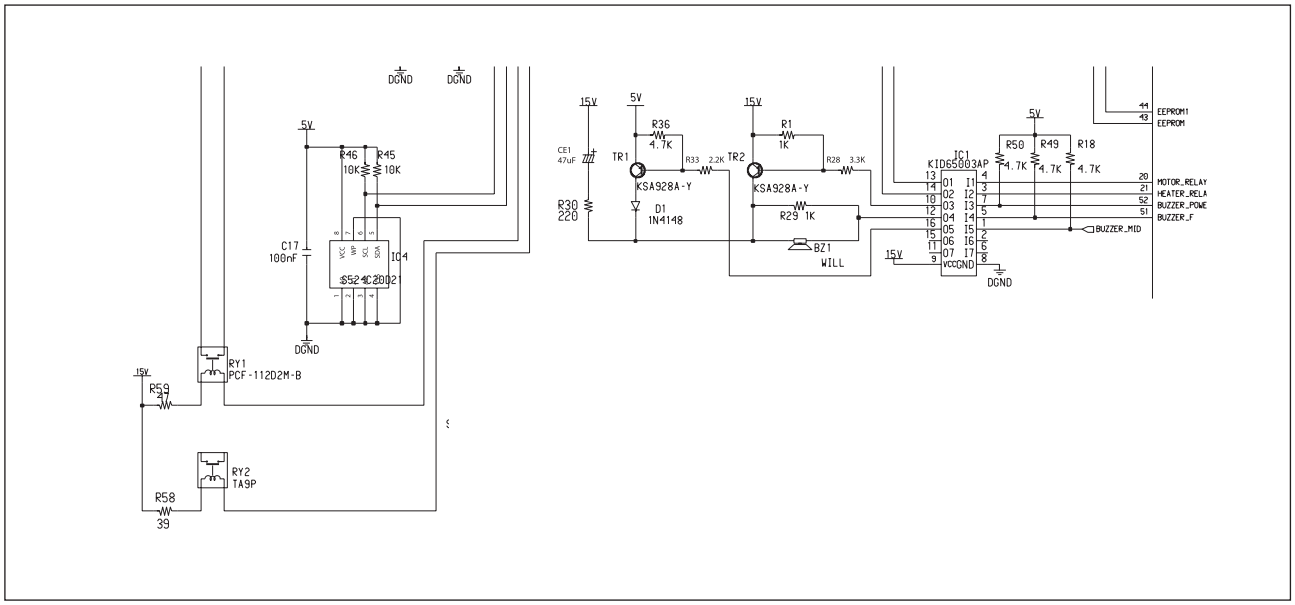

► FUNCTION

- Control the electrical harness parts of the set.

► DESCRIPTION

- MICOM sends a high signal to the port of the target harness to operate.
- If a high signal enters as IC1 input, the output terminal decreases.
- At this time, a relay operates to supply power to the target harness.
- EEPROM offers the fuction that IC4 memorizes the course Where the machine was working after electricity failure.

12-4. SENSING PART

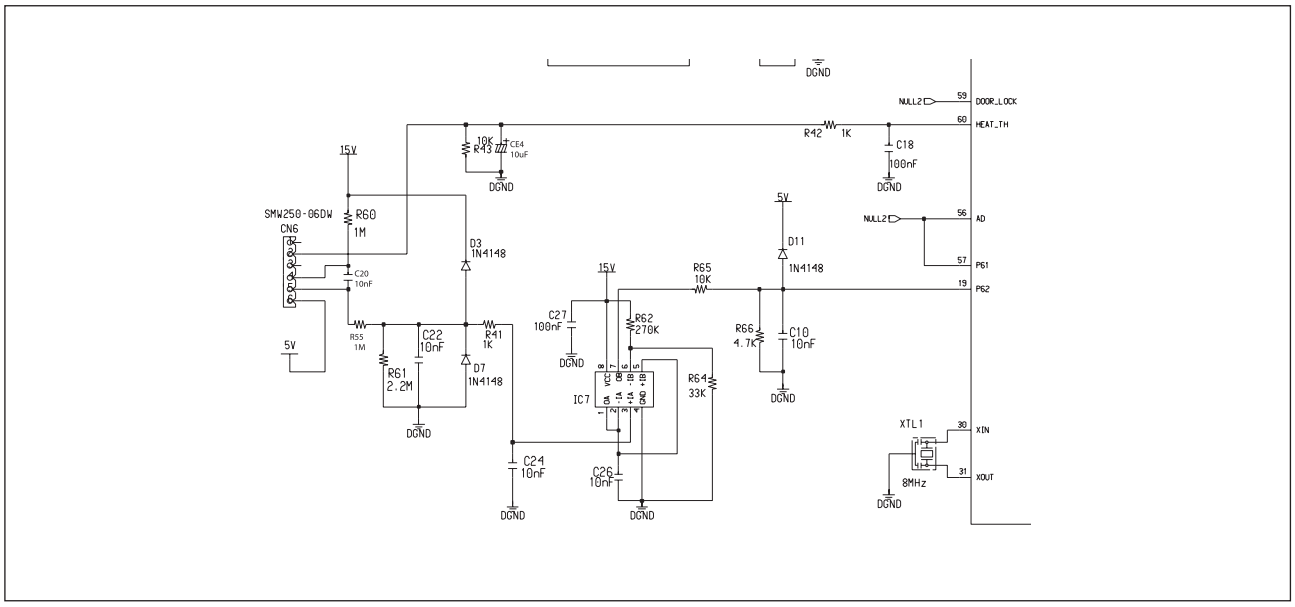

► FUNCTION

- Check the heat by the output of Thermistor
- Check the drying grade using a humidity sensor.

► DESCRIPTION

- IC7 checks the drying grade comparing the value of humidity sensor with its default value.
- It controls the temperature of the heater by the output of thermistor.

12-5. COMMUNICATION PART

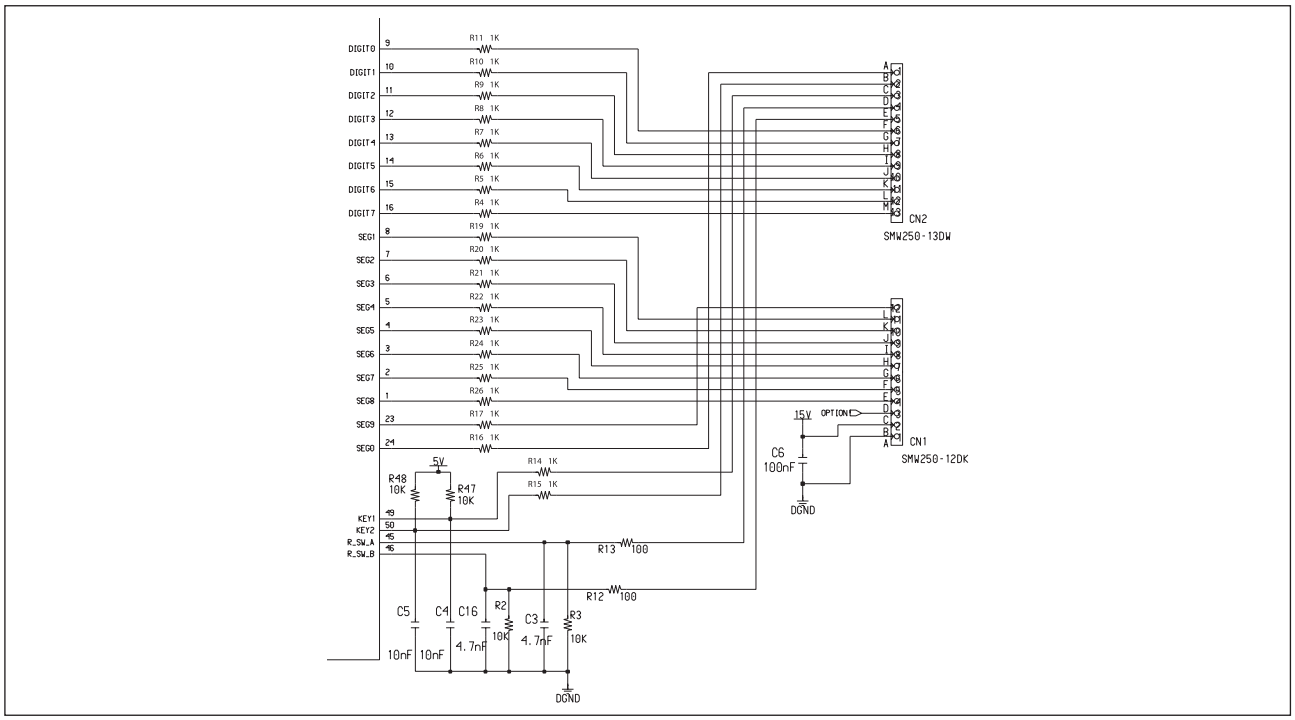

► FUNCTION

- Communications circuit for controlling the display of the SUB PCB.
- Control circuit for the encoder and switch of the SUB PCB.

► DESCRIPTION

- Input/Output ports of the MICOM for controlling the LED, display, and switch of the SUB PBA.

13. REFERENCE INFORMATION

13-1. MODEL NAME

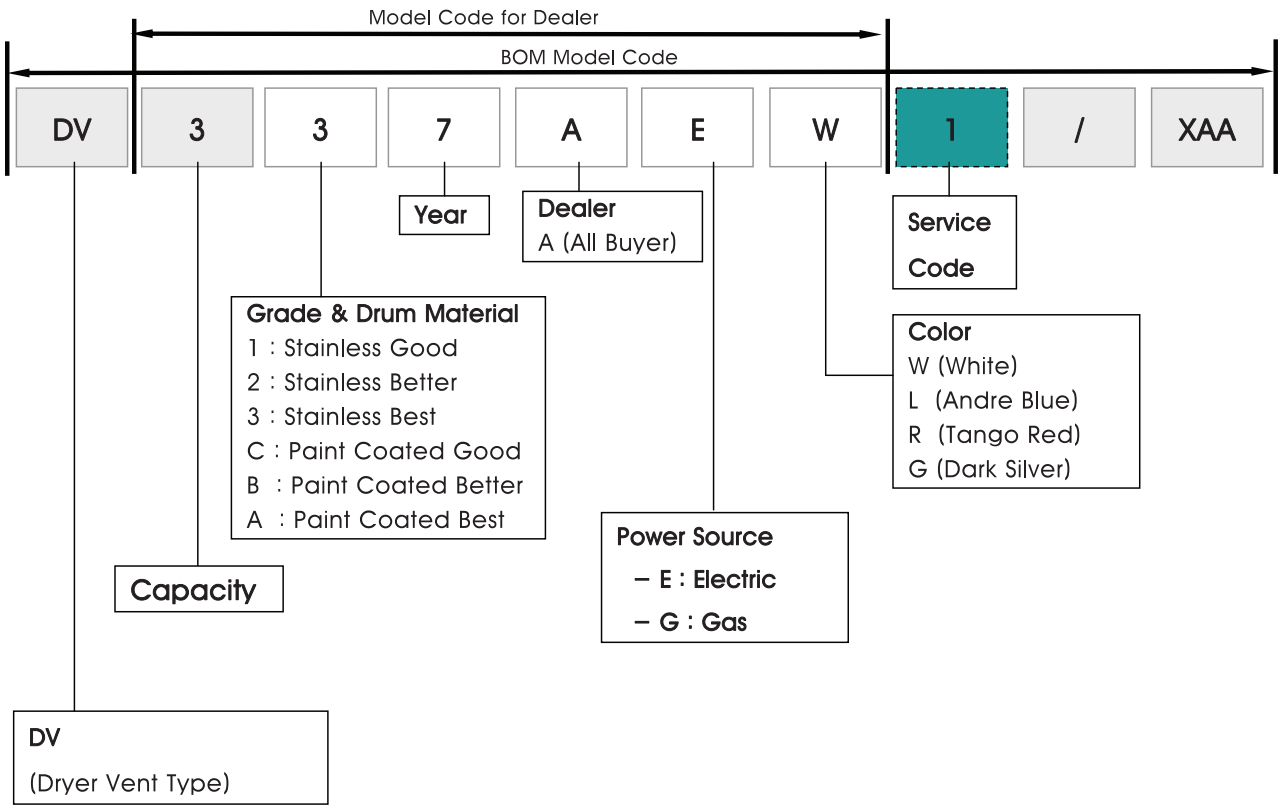

13-2. TERMINOLOGY

1) ASSY-MAIN PCB (Imbalance Sensor)
→ To prevent the laundry from gathering on one side of the tube causing noise and vibration, the washing machine uses an imbalance detection device that evenly disentangles the laundry before the hydrating cycle starts.

2) DOOR-LOCK S/W
→ Prevents the door from being opened while a cycle is in progress. For safety purposes, it keeps the door locked even in pause mode or after the washing cycle unless the water level frequency is greater than 24.8Khz (anti-overflow level) or the inside-tube temperature is less than 65℃ in the hydrating cycle, and 55℃ in the washing cycle.

3) SENSOR-PRESSURE (Anti Over-Flow)
→ When the water supplied is more than 2/3 of the tube capacity due to a malfunction of the water supply valve, this device automatically starts water-draining and displays “OVER-FLOW ERROR(E3)” on the LED.

4) THERMISTOR
→ Keeps sensoring and controlling the temperature inside the tube to keep it below your settings.

5) ASSY-THERMAL FUSE (Anti Over-Heat)
→ When the washing heater is overheated due to an error in the thermistor or any other malfunction, the assy-thermal fuse (built in the heater) is automatically activated to discon nect the power for your and the product’s safety.

6) ASSY-MAIN PCB (Sensitive Laundry Protection)
→ To avoid any damage to sensitive laundry, the tube temperature is detected and “ERROR(E8)” is displayed on the LED for Wool or Lingerie courses when the temperature is over 50℃.

7) THERMOSTAT (Anti Over-Heat)
→ When the heater (drier) overheats from an error in the thermistor or any other malfunction, the thermostat (installed on the drying duct) is automatically activated to disconnect the power for your or product’s safety

8) CHILD LOCK
→ Prevents children from playing with the washing machine.

13-3. CHECK THESE POINTS IF YOUR DRYER

doesn't run.	• Be sure the door is latched shut. • Be sure the power cord is plugged into a live electrical outlet. • Check the home's circuit breaker and fuses. • Press the Cycle Selector dial again if the door is opened during the cycle.
doesn't heat.	• Check the home's circuit breaker and fuses. • Select a heat setting other than Air Fluff. • On a gas dryer, check that the gas supply is on. • Clean the lint filter and exhaust duct. • Dryer may have moved into the cool-down phase of the cycle.
doesn't dry.	• Check all of the above, plus... • Be sure the exhaust hood outside the home can open and close freely. • Check exhaust system for lint buildup. Ducting should be inspected and cleaned annually. • Use 4" rigid metal exhaust duct. • Do not overload. 1 wash load = 1 dryer load. • Sort heavy items from lightweight items. • Large, bulky items like blankets or comforters may require repositioning to ensure even drying. • Check that the washer is draining properly to extract adequate water from theload. • Load may be too small to tumble properly. Add a few towels.
is noisy.	• Check the load for objects such as coins, loose buttons, nails, etc. Remove promptly. • It is normal to hear the dryer gas valve or heating element cycle on and off during the drying cycle. • Be sure the dryer is leveled properly as outlined in the installation instruction. • It is normal for the dryer to hum from the high velocity of air moving through the dryer drum and exhaust system.
dries unevenly.	• Seams, pockets, and other similarly heavy areas may not be completely dry when the rest of the load has reached the selected dryness level. This is normal. Select the Very Dry setting if desired. • If one heavy item is dried with a lightweight load, such as one towel with sheets, it is possible that the heavy item will not be completely dry when the rest of the load has reached the selected dryness level. Sort heavy items from lightweight items for best drying results.
has an odor.	• Household odors from painting, varnishing, strong cleaners, etc. may enter the dryer with the surrounding room air. This is normal as the dryer draws the air from the room, heats it, pulls it through the tumbler, and exhausts it outside. When these odors linger in the air, ventilate the room completely before using the dryer.
shuts off before load is dry	• Dryer load is too small. Add more items or a few towels and restart the cycle. • Dryer load is too large. Remove some items and restart the dryer.

13-4. INFORMATION CODES

- Information codes may be displayed to help you better understand what is occurring with the dryer.

Code Symbol	Meaning	Solution
tS	Heater temperature control problem.	Call for service. See below.
dC	Door open sensing problem.	Call for service. See below.
do	Door open error When the door is open, the dryer will not operate.	Be sure the door is latched shut. If problem continues, call for service. See below.

- For any codes not listed above, call 1-800-726-7864 (1-800-SAMSUNG).

13-5. FABRIC CARE CHART

The following symbols provide garment care directions without words. The care label will include, in order, four symbols: washing, bleaching, drying, and ironing (or dry cleaning when necessary). The use of symbols ensures consistency among garment manufacturers of domestic and imported items. Follow care label directions to maximize garment life and reduce laundering problems.

Wash Cycle		Special Instructions		Warning Symbols for Laundering	
	Normal		Line Dry/ Hang to Dry		Do Not Wash
	Permanent Press/ Wrinkle Resistant/ Wrinkle Control		Drip Dry		Do Not Wring
	Gentle/Delicates		Dry Flat		Do Not Bleach
	Hand Wash	Heat Setting			Do Not Tumble Dry
Water Temperature**			High		No Steam (added to iron)
	Hot		Medium		Do Not Iron
	Warm		Low		
	Cold		Any Heat		
Bleach			No Heat/Air		
	Any Bleach (when needed)	Iron-Dry or Steam Temperatures			Line Dry/ Hang to Dry
	Only Non-Chlorine (color-safe) Bleach (when needed)		High		Drip Dry
Tumble Dry Cycle			Medium		Dry Flat
	Normal		Low		
	Permanent Press/ Wrinkle Resistant/ Wrinkle Control	Dryclean			
	Gentle/ Delicates		Dry Clean		
			Do Not Dry Clean		

**The dot symbols represent appropriate wash water temperatures for various items. The temperature range for Hot is 105° –125° F/ 41° – 52° C, for Warm 85° – 105° F/29° – 41° C and for Cold 60° – 85° F/16° – 29° C. (Wash water temperature must be a minimum of 60° F/16° C for detergent activation and effective cleaning.)